REXNORD
The right chain!

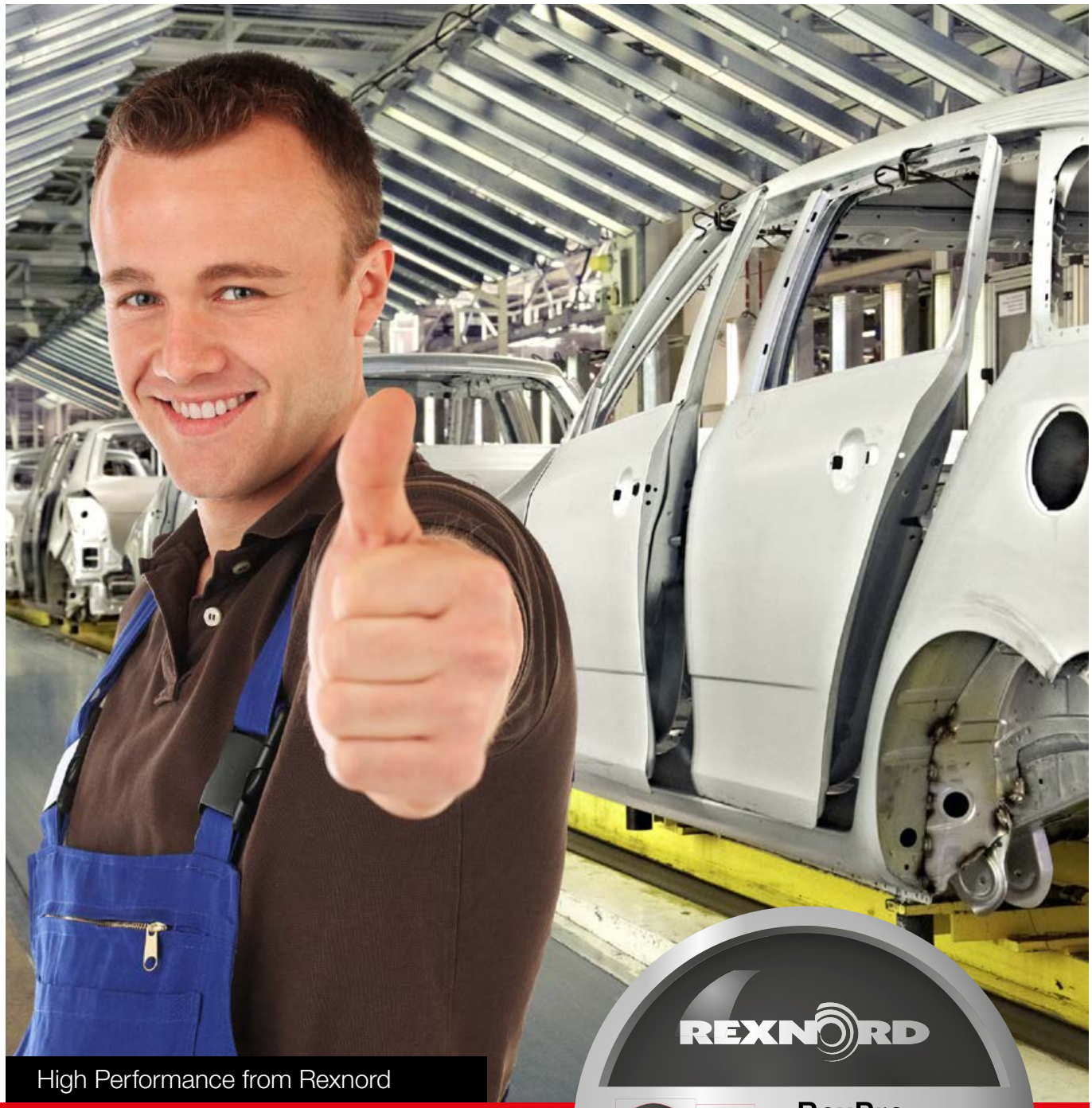

High Performance from Rexnord

# RexPro Roller chains | European type

MODULE_04/GB/2014/03 // No liability accepted for misprints or errors!

REXNORD
The right chain!

**Good corrosion protection, maximum operating reliability**

# Roller chains - European type

High Performance from Rexnord.

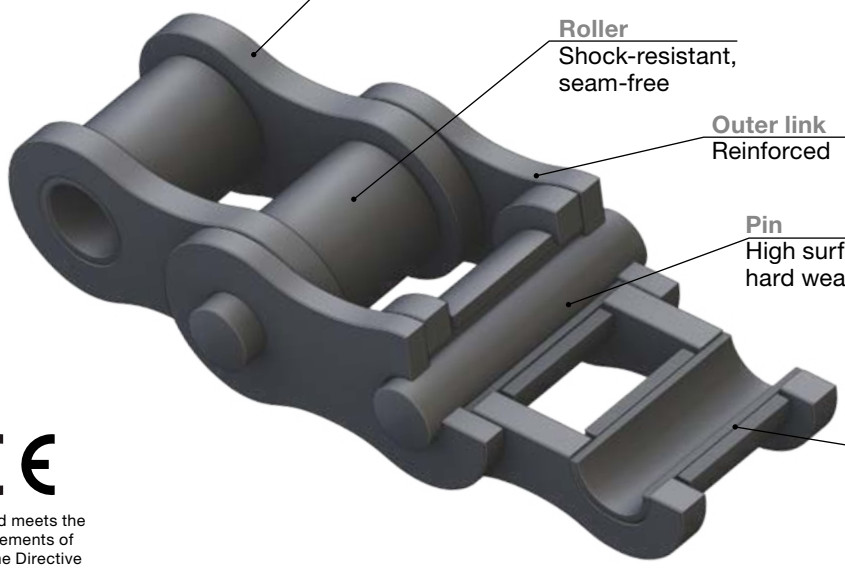


CE

Rexnord meets the requirements of Machine Directive 2006/42/EC

## APPLICATIONS

- Automotive, textile and steel industry, bottling and beverage plants, agricultural machinery, construction machinery
- Food and confectionery industry, packing industry, conveyor engineering
- Pharmaceutical industry, paper and wood processing, machine and plant manufacturers

## CHARACTERISTICS

- High fatigue resistance
- Improved wear resistance
- Outstanding corrosion protection
- Very environmentally friendly
- Manufactured from high-performance materials
- Ball-drifted plate holes
- Seam-free rollers
- Shot-peened pins, plates, bushes and rollers
- Delivered adjusted and torsion-free on request
- NSF H2 certification, RoHS:2005 compliant

## ADVANTAGES

- Minimal bedding-in elongation
- Longer working life
- Very high impact strength
- Very robust under the toughest conditions
- Maximum operating reliability
- Improved cost-effectiveness

## LUBRICATION

- RexPro lubrication without heavy metals for improved protection
- Operating temperature: -30° C to +130° C (can be extended from -40° C to +250° C)
- Very good suface adhesion; remains drip resistant even at high temperatures
- No heavy metals, Teflon- and silicone-free



MODULE_04/GB/2014/03 // No liability accepted for misprints or errors!

# RexPro - High performance from Rexnord

### Excellent Corrosion Protection
- 8 - 10 times better than the best competitors
- More than 100 % better in the buckling test
- Highly versatile, also suitable for aggressive environments

### Improved Wear Resistance
- 8 - 12 % improvement in comparison to predecessor
- Great protection through RexPro lubrication
- Long working life
- High operating reliability

### High Fatigue Resistance
- Ball-drifted plate holes
- Shot-peened chain links, seam-free rollers
- High pre-loading

### Eco friendly
- Through RexPro lubrication
- No heavy metals; Teflon- and silicone-free
- Environmental management system conforms to DIN EN ISO 14001

# Salt spray test in accordance with DIN EN ISO 9227

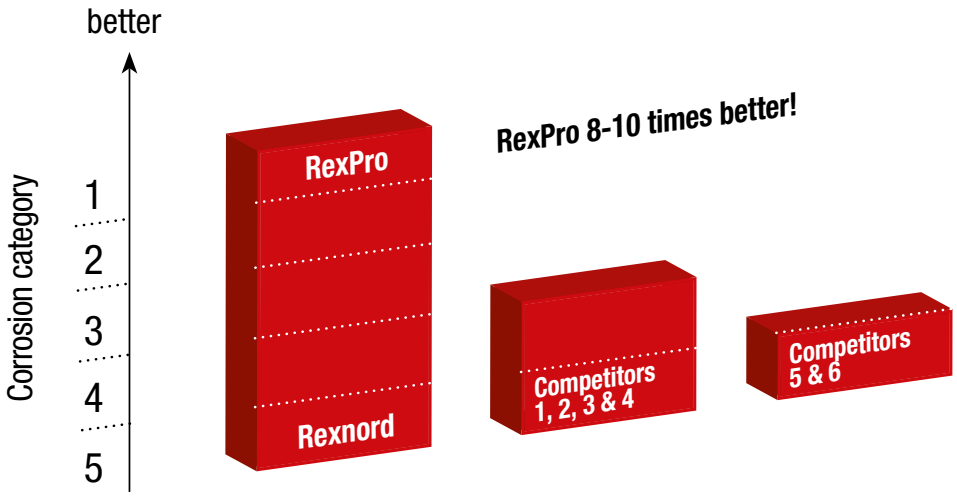

CE

Rexnord meets the requirements of Machine Directive 2006/42/EC

MODULE_04/GB/2014/03 // No liability accepted for misprints or errors!

REXNORD
The right chain!

# Roller chains - European type

High Performance from Rexnord.

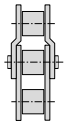

**Simplex roller chains**

CE

Rexnord meets the requirements of Machine Directive 2006/42/EC

## Excellent Corrosion Protection

- 8 - 10 times better than the best competitors
- More than 100 % better in the buckling test
- Highly versatile, also suitable for aggressive environments

## Improved Wear Resistance

- 8 - 12 % improvement in comparison to predecessor
- Great protection through RexPro lubrication
- Long working life
- High operating reliability

## High Fatigue Resistance

- Ball-drifted plate holes
- Shot-peened chain links, seam-free rollers
- High pre-loading

## Eco friendly

- Through RexPro lubrication
- No heavy metals; Teflon- and silicone-free
- Environmental management system conforms to DIN EN ISO 14001

## Simplex roller chains, DIN ISO 606 (DIN 8187)

| Chain No. | Pitch p | | Width between inner plates | Roller diameter | Pin diameter | Width over inner link | Plate depth | Pin length | Connecting pin length | Bearing area | Required minimum tensile strength DIN/ISO | Average tensile strength | Weight | Loose parts | | | | | |
|---|---|---|---|---|---|---|---|---|---|---|---|---|---|---|---|---|---|---|---|
| | | | $b_1$ min | $d_1$ max | $d_2$ max | $b_2$ max | g | $a_1$ max | $a_3$ max | A | $F_U$ | $F_B$ | q | | | | | | |
| | Inch | mm | mm | mm | mm | mm | mm | mm | mm | $cm^2$ | N | N | kg/m | A | B | C | E | L | S |
| 04 | | 6 | 2.80 | 4.00 | 1.85 | 4.10 | 5.0 | 7.4 | 10.3 | 0.08 | 3 000 | 3 000 | 0.2 | | | x | x | | |
| 05 B - 1 | | 8 | 3.00 | 5.00 | 2.31 | 4.77 | 7.1 | 8.6 | 11.7 | 0.11 | 4 400 | 4 400 | 0.2 | | | x | x | | |
| 06 B - 1 | 0.375 | 9.52 | 5.72 | 6.35 | 3.28 | 8.53 | 8.2 | 13.5 | 16.8 | 0.28 | 8 900 | 9 000 | 0.5 | | | x | x | | |
| 083 | 0.50 | 12.7 | 4.88 | 7.75 | 4.09 | 7.90 | 10.3 | 12.9 | 14.4 | 0.32 | 12 000 | 12 000 | 0.5 | | | x | x | x | |
| 084 | 0.50 | 12.7 | 4.88 | 7.75 | 4.09 | 8.80 | 11.1 | 14.8 | 16.3 | 0.326 | 16 000 | 16 000 | 0.6 | | | x | x | x | |
| 08 B - 1 | 0.50 | 12.7 | 7.75 | 8.51 | 4.45 | 11.30 | 11.6 | 17.0 | 20.9 | 0.50 | 17 800 | 21 000 | 0.7 | x | x | x | x | x | |
| 10 B - 1 | 0.625 | 15.87 | 9.65 | 10.16 | 5.08 | 13.28 | 14.6 | 19.6 | 23.7 | 0.67 | 22 200 | 25 000 | 0.9 | x | x | x | x | x | |
| 12 B - 1 | 0.75 | 19.05 | 11.68 | 12.07 | 5.72 | 15.62 | 15.9 | 22.7 | 27.3 | 0.89 | 28 900 | 32 000 | 1.2 | x | x | x | x | x | |
| 16 B - 1 | 1.00 | 25.4 | 17.02 | 15.88 | 8.28 | 25.40 | 20.5 | 36.1 | 42.4 | 2.10 | 60 000 | 80 000 | 2.6 | x | x | x | x | x | x |
| 20 B - 1 | 1.25 | 31.75 | 19.56 | 19.05 | 10.19 | 29.00 | 25.7 | 40.4 | 47.6 | 2.96 | 95 000 | 120 000 | 3.7 | x | x | | | x | x |
| 24 B - 1 | 1.50 | 38.1 | 25.40 | 25.40 | 14.63 | 37.90 | 33.0 | 53.8 | 60.6 | 5.54 | 160 000 | 211 000 | 6.9 | x | x | | | x | x |
| 28 B - 1 | 1.75 | 44.45 | 30.99 | 27.94 | 15.90 | 46.50 | 37.0 | 63.3 | 72.8 | 7.39 | 200 000 | 256 000 | 8.6 | x | x | | | x | x |
| 32 B - 1 | 2.00 | 50.8 | 30.99 | 29.21 | 17.81 | 45.50 | 41.2 | 65.1 | 73.6 | 8.10 | 250 000 | 315 000 | 9.5 | x | x | | | x | x |
| 40 B - 1 | 2.50 | 63.5 | 38.10 | 39.37 | 22.89 | 55.70 | 51.5 | 78.9 | 91.3 | 12.7 | 355 000 | 380 000 | 15.1 | x | x | | | x | x |
| 48 B - 1 | 3.00 | 76.2 | 45.72 | 48.26 | 29.24 | 70.50 | 63.5 | 98.5 | 124.0 | 20.6 | 560 000 | 600 000 | 24.5 | x | x | | | x | x |
| 56 B - 1 | 3.50 | 88.9 | 53.34 | 53.98 | 34.32 | 81.30 | 77.0 | 114.7 | 140.0 | 27.9 | 850 000 | 950 000 | 36.5 | x | x | | | | x |
| 64 B - 1 | 4.00 | 101.6 | 60.96 | 63.50 | 39.40 | 92.00 | 93.3 | 130.0 | 143.0 | 36.2 | 1 120 000 | - | 50.0 | x | x | | | | x |
| 72 B - 1 | 4.50 | 114.3 | 68.58 | 72.39 | 44.50 | 103.80 | 105.3 | 147.0 | 161.0 | 46.2 | 1 400 000 | - | 65.0 | x | x | | | | x |

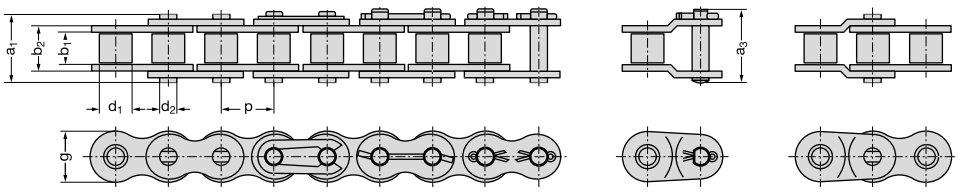


| B | A | E | S | L | C |
|---|---|---|---|---|---|
| inner link | outer link | connecting link with clip | connecting link with cotter pin | cranked link with cotter pin | double cranked link |

MODULE_04/GB/2014/03 // No liability accepted for misprints or errors!

# Roller chains - European type

High Performance from Rexnord.

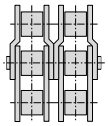

**Duplex roller chains**

## Excellent Corrosion Protection

- 8 - 10 times better than the best competitors
- More than 100 % better in the buckling test
- Highly versatile, also suitable for aggressive environments

## Improved Wear Resistance

- 8 - 12 % improvement in comparison to predecessor
- Great protection through RexPro lubrication
- Long working life
- High operating reliability

## High Fatigue Resistance

- Ball-drifted plate holes
- Shot-peened chain links, seam-free rollers
- High pre-loading

## Eco friendly

- Through RexPro lubrication
- No heavy metals; Teflon- and silicone-free
- Environmental management system conforms to DIN EN ISO 14001

CE

Rexnord meets the requirements of Machine Directive 2006/42/EC

## Duplex roller chains, DIN ISO 606 (DIN 8187)

| Chain No. | Pitch p | | Width beetween inner plates | Roller diameter | Pin diameter | Width over inner link | Plate depth | Transverse pitch | Pin length | Connecting pin length | Bearing area | Required minimum tensile strength DIN/ISO | Average tensile strength | Weight | Loose parts | | | | | |
|---|---|---|---|---|---|---|---|---|---|---|---|---|---|---|---|---|---|---|---|---|
| | | | $b_1$ min | $d_1$ max | $d_2$ max | $b_2$ max | g | e | $a_1$ max | $a_3$ max | A | $F_U$ | $F_B$ | q | | | | | | |
| | Inch | mm | mm | mm | mm | mm | mm | mm | mm | mm | cm² | N | N | kg/m | A | B | C | E | L | S |
| 06 B - 2 | 0.375 | 9.52 | 5.72 | 6.35 | 3.28 | 8.53 | 8.2 | 10.24 | 23.8 | 27.1 | 0.56 | 16 900 | 18 000 | 0.8 | | | x | x | x | |
| 08 B - 2 | 0.50 | 12.7 | 7.75 | 8.51 | 4.45 | 11.30 | 11.6 | 13.92 | 30.6 | 34.9 | 1.01 | 31 100 | 45 000 | 1.4 | x | x | x | x | x | |
| 10 B - 2 | 0.625 | 15.87 | 9.65 | 10.16 | 5.08 | 13.28 | 14.6 | 16.59 | 35.5 | 40.3 | 1.34 | 44 500 | 50 000 | 1.8 | x | x | x | x | x | |
| 12 B - 2 | 0.75 | 19.05 | 11.68 | 12.07 | 5.72 | 15.62 | 15.9 | 19.46 | 41.7 | 46.8 | 1.79 | 57 800 | 64 000 | 2.3 | x | x | x | x | x | |
| 16 B - 2 | 1.00 | 25.4 | 17.02 | 15.88 | 8.28 | 25.40 | 20.5 | 31.88 | 67.4 | 73.4 | 4.21 | 106 000 | 140 000 | 5.3 | x | x | x | x | x | x |
| 20 B - 2 | 1.25 | 31.75 | 19.56 | 19.05 | 10.19 | 29.00 | 25.7 | 36.45 | 76.9 | 83.6 | 5.91 | 170 000 | 210 000 | 7.3 | x | x | | | x | x |
| 24 B - 2 | 1.50 | 38.1 | 25.40 | 25.40 | 14.63 | 37.90 | 33.0 | 48.36 | 102.2 | 112.7 | 11.1 | 280 000 | 370 000 | 13.8 | x | x | | | x | x |
| 28 B - 2 | 1.75 | 44.45 | 30.99 | 27.94 | 15.90 | 46.50 | 37.0 | 59.56 | 122.8 | 132.7 | 14.8 | 360 000 | 500 000 | 17.3 | x | x | | | x | x |
| 32 B - 2 | 2.00 | 50.8 | 30.99 | 29.21 | 17.81 | 45.50 | 41.2 | 58.55 | 123.6 | 132.4 | 16.2 | 450 000 | 530 000 | 18.8 | x | x | | | x | x |
| 40 B - 2 | 2.50 | 63.5 | 38.10 | 39.37 | 22.89 | 55.70 | 51.5 | 72.29 | 151.2 | 163.8 | 25.5 | 630 000 | 750 000 | 29.9 | x | x | | | x | x |
| 48 B - 2 | 3.00 | 76.2 | 45.72 | 48.26 | 29.24 | 70.50 | 63.5 | 91.21 | 189.7 | 215.2 | 41.2 | 1 000 000 | 1 250 000 | 48.6 | x | x | | | x | x |
| 56 B - 2 | 3.50 | 88.9 | 53.34 | 53.98 | 34.32 | 81.30 | 77.0 | 106.60 | 221.3 | 246.5 | 55.8 | 1 600 000 | 1 900 000 | 72.5 | x | x | | | x | x |
| 64 B - 2 | 4.00 | 101.6 | 60.96 | 63.50 | 39.40 | 92.00 | 93.3 | 119.89 | 250.0 | 263.0 | 72.5 | 2 000 000 | 2 000 000 | 98.0 | x | x | | | | x |
| 72 B - 2 | 4.50 | 114.3 | 68.58 | 72.39 | 44.50 | 103.80 | 105.3 | 136.27 | 283.0 | 297.0 | 92.4 | 2 500 000 | 2 500 000 | 128.0 | x | x | | | | x |

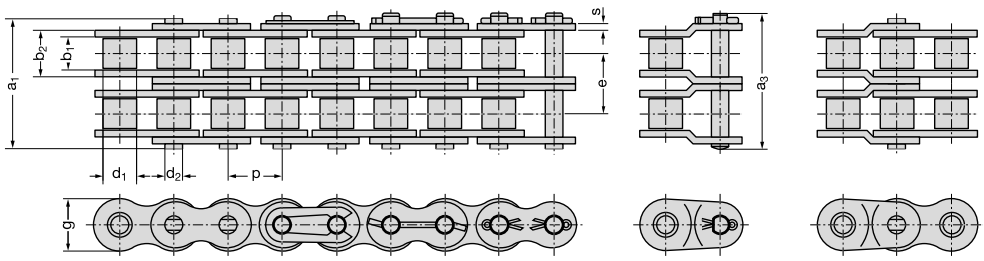


| B | A | E | S | L | C |
|---|---|---|---|---|---|
| inner link | outer link | connecting link with clip | connecting link with cotter pin | cranked link with cotter pin | double cranked link |

MODULE_04/GB/2014/03 // No liability accepted for misprints or errors!

REXNORD
The right chain!

# Roller chains - European type

High Performance from Rexnord.

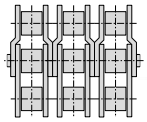

**Triplex roller chains**

CE

Rexnord meets the requirements of Machine Directive 2006/42/EC

## Excellent Corrosion Protection

- 8 - 10 times better than the best competitors
- More than 100 % better in the buckling test
- Highly versatile, also suitable for aggressive environments

## Improved Wear Resistance

- 8 - 12 % improvement in comparison to predecessor
- Great protection through RexPro lubrication
- Long working life
- High operating reliability

## High Fatigue Resistance

- Ball-drifted plate holes
- Shot-peened chain links, seam-free rollers
- High pre-loading

## Eco friendly

- Through RexPro lubrication
- No heavy metals; Teflon- and silicone-free
- Environmental management system conforms to DIN EN ISO 14001

## Triplex roller chains, DIN ISO 606 (DIN 8187)

| Chain No. | Pitch p | | Width beetween inner plates | Roller diameter | Pin diameter | Width over inner link | Plate depth | Transverse pitch | Pin length | Connecting pin length | Bearing area | Required minimum tensile strength DIN/ISO | Average tensile strength | Weight | Loose parts | | | | | |
|---|---|---|---|---|---|---|---|---|---|---|---|---|---|---|---|---|---|---|---|---|
| | | | $b_1$ min | $d_1$ max | $d_2$ max | $b_2$ max | g | e | $a_1$ max | $a_3$ max | A | $F_U$ | $F_B$ | q | | | | | | |
| | Inch | mm | mm | mm | mm | mm | mm | mm | mm | mm | cm² | N | N | kg/m | A | B | C | E | L | S |
| 06 B - 3 | 0.375 | 9.52 | 5.72 | 6.35 | 3.28 | 8.53 | 8.3 | 10.24 | 34.0 | 37.3 | 0.84 | 24 900 | 26 000 | 1.2 | | | x | x | x | |
| 08 B - 3 | 0.50 | 12.7 | 7.75 | 8.51 | 4.45 | 11.30 | 11.6 | 13.92 | 44.6 | 48.8 | 1.51 | 44 500 | 64 000 | 2.1 | x | x | x | x | x | |
| 10 B - 3 | 0.625 | 15.87 | 9.65 | 10.16 | 5.08 | 13.28 | 14.6 | 16.59 | 52.2 | 56.9 | 2.02 | 66 700 | 75 000 | 2.6 | x | x | x | x | x | |
| 12 B - 3 | 0.75 | 19.05 | 11.68 | 12.07 | 5.72 | 15.62 | 15.9 | 19.46 | 61.3 | 66.3 | 2.68 | 86 700 | 96 000 | 3.4 | x | x | x | x | x | |
| 16 B - 3 | 1.00 | 25.4 | 17.02 | 15.88 | 8.28 | 25.40 | 20.5 | 31.88 | 99.3 | 105.3 | 6.31 | 160 000 | 210 000 | 7.8 | x | x | x | x | x | |
| 20 B - 3 | 1.25 | 31.75 | 19.56 | 19.05 | 10.19 | 29.00 | 25.7 | 36.45 | 113.4 | 121.2 | 8.87 | 250 000 | 315 000 | 10.9 | x | x | | | x | x |
| 24 B - 3 | 1.50 | 38.1 | 25.40 | 25.40 | 14.63 | 37.90 | 33.0 | 48.36 | 150.5 | 160.4 | 16.6 | 425 000 | 560 000 | 20.5 | x | x | | | x | x |
| 28 B - 3 | 1.75 | 44.45 | 30.99 | 27.94 | 15.90 | 46.50 | 37.0 | 59.56 | 182.3 | 192.2 | 22.2 | 530 000 | 750 000 | 25.6 | x | x | | | x | x |
| 32 B - 3 | 2.00 | 50.8 | 30.99 | 29.21 | 17.81 | 45.50 | 41.2 | 58.55 | 182.2 | 191.0 | 24.3 | 670 000 | 795 000 | 28.0 | x | x | | | x | x |
| 40 B - 3 | 2.50 | 63.5 | 38.10 | 39.37 | 22.89 | 55.70 | 51.5 | 72.29 | 223.5 | 236.1 | 38.2 | 950 000 | 117 000 | 44.8 | x | x | | | x | x |
| 48 B - 3 | 3.00 | 76.2 | 45.72 | 48.26 | 29.24 | 70.50 | 63.5 | 91.21 | 281.0 | 306.5 | 61.8 | 1 500 000 | 187 0000 | 72.5 | x | x | | | x | x |
| 56 B - 3 | 3.50 | 88.9 | 53.34 | 53.98 | 34.32 | 81.30 | 77.0 | 106.60 | 328.0 | 353.2 | 83.7 | 2 240 000 | 2 85 0000 | 109.0 | x | x | | | | x |
| 64 B - 3 | 4.00 | 101.6 | 60.96 | 63.50 | 39.40 | 92.00 | 93.0 | 119.89 | 368.2 | 379.0 | 108.7 | 3 000 000 | 3 000 000 | 144.0 | x | x | | | | x |
| 72 B - 3 | 4.50 | 114.3 | 68.58 | 72.39 | 44.50 | 103.80 | 105.0 | 136.27 | 418.7 | 429.7 | 138.6 | 3 750 000 | - | 171.0 | x | x | | | | x |

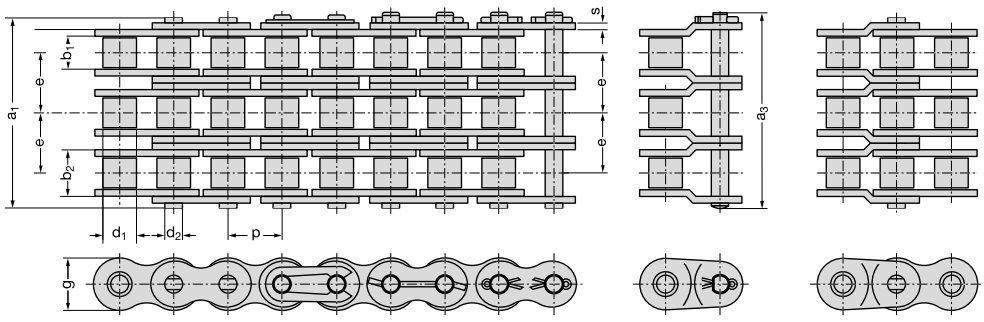


B inner link | A outer link | E connecting link with clip | S connecting link with cotter pin | L cranked link with cotter pin | C double cranked link

MODULE_04/GB/2014/03 // No liability accepted for misprints or errors!

REXNORD
The right chain!

REXNORD
The right chain!

# Overview Rexnord roller chains

## Roller Chains

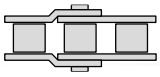

**RexPro**
RexPro lubrication
improved wear resistance
high fatigue resistance

- Outstanding protection against corrosion and wear
- Unique protection against chain joint stiffness
- Extremely eco-friendly

**RexAthletic**
good loading capacity
extended lubrication intervals

- Durable and low-maintenance
- Longer servicing intervals
- High loading capacity

**RexCarbon**
no lubrication
low noise

- Maintenance-free
- Low noise
- Eco-friendly

**RexPlus**
excellent corrosion resistance
high reliability

- Excellent resistance to rust and acids
- Highly reliable
- Fulfils hygiene requirements
- NSF H1 certification

**RexPlusCarbon**
no lubrication
excellent corrosion resistance

- Combination of RexPlus and RexCarbon
- Excellent resistance to rust and acids
- Maintenance-free
- NSF H1 certification

**RexHiPro**
good corrosion resistance
excellent loading capacity

- Outstanding corrosion resistance
- Long service life
- High loading capacity

**Link-Belt®**
a brand of REXNORD

- The optimum choice for light and medium duty
- Good cost-benefit ratio
- High availability

**RexProX**
RexPro lubrication
improved wear resistance
high fatigue resistance

- Extremely high loading capacity
- Long service life
- Outstanding protection against corrosion and wear

## Leaf Chains

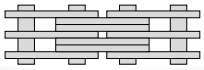

**RexPro**
RexPro lubrication
improved wear resistance
high fatigue resistance

- Outstanding protection against corrosion and wear
- Unique protection against chain joint stiffness
- Extremely eco-friendly

**RexHiPro**
good corrosion resistance
excellent loading capacity

- Outstanding corrosion resistance
- Long service life
- High loading capacity

**RexAthletic**
good loading capacity
extended lubrication intervals

- Durable and low-maintenance
- Longer servicing intervals
- High loading capacity
- Extreme wear resistance for double-length service life

**REXDL®**
a brand of REXNORD

- The optimum choice for light and medium duty
- Good cost-benefit ratio
- Good availability

Rexnord Kette GmbH · Industriestr. 1 · 57518 Betzdorf · Tel (49) 2741 284 0 · rexinfo@rexnord.com · www.rexnord-kette.de
Rexnord Corporate Headquarters · 4701 W. Greenfield Avenue · Milwaukee, WI 53214-5310 · Phone: (414) 643 3000

MODULE_04/GB/2014/03 // No liability accepted for misprints or errors!

REXNORD
The right chain!

High Performance from Rexnord

# Roller chains | American type

REXNORD

**RexPro**
RexPro lubrication
improved wear resistance
high fatigue resistance

MODULE_04/GB/2014/03 // No liability accepted for misprints or errors!

REXNORD
The right chain!

**Good corrosion protection, maximum operating reliability**

# Roller chains - American type

High Performance from Rexnord.

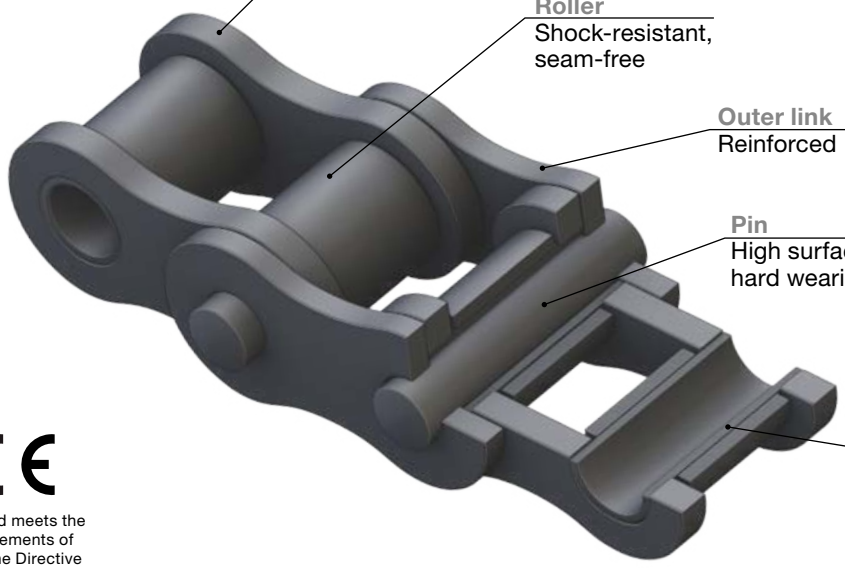


CE

Rexnord meets the requirements of Machine Directive 2006/42/EC

## APPLICATIONS

- Automotive, textile and steel industry, bottling and beverage plants, agricultural machinery, construction machinery
- Food and confectionery industry, packing industry, conveyor engineering
- Pharmaceutical industry, paper and wood processing, machine and plant manufacturers

## CHARACTERISTICS

- High fatigue resistance
- Improved wear resistance
- Outstanding corrosion protection
- Very environmentally friendly
- Manufactured from high-performance materials
- Ball-drifted plate holes
- Seam-free rollers
- Shot-peened pins, plates, bushes and rollers
- Delivered adjusted and torsion-free on request
- NSF H2 certification, RoHS:2005 compliant

## ADVANTAGES

- Minimal bedding-in elongation
- Longer working life
- Very high impact strength
- Very robust under the toughest conditions
- Maximum operating reliability
- Improved cost-effectiveness

## LUBRICATION

- RexPro lubrication without heavy metals for improved protection
- Operating temperature: -30° C to +130° C (can be extended from -40° C to +250° C)
- Very good suface adhesion; remains drip resistant even at high temperatures
- No heavy metals, Teflon- and silicone-free



MODULE_04/GB/2014/03 // No liability accepted for misprints or errors!

# RexPro - High performance from Rexnord

### Excellent Corrosion Protection
- 8 - 10 times better than the best competitors
- More than 100 % better in the buckling test
- Highly versatile, also suitable for aggressive environments

### Improved Wear Resistance
- 8 - 12 % improvement in comparison to predecessor
- Great protection through RexPro lubrication
- Long working life
- High operating reliability

### High Fatigue Resistance
- Ball-drifted plate holes
- Shot-peened chain links, seam-free rollers
- High pre-loading

### Eco friendly
- Through RexPro lubrication
- No heavy metals; Teflon- and silicone-free
- Environmental management system conforms to DIN EN ISO 14001

# Salt spray test in accordance with DIN EN ISO 9227

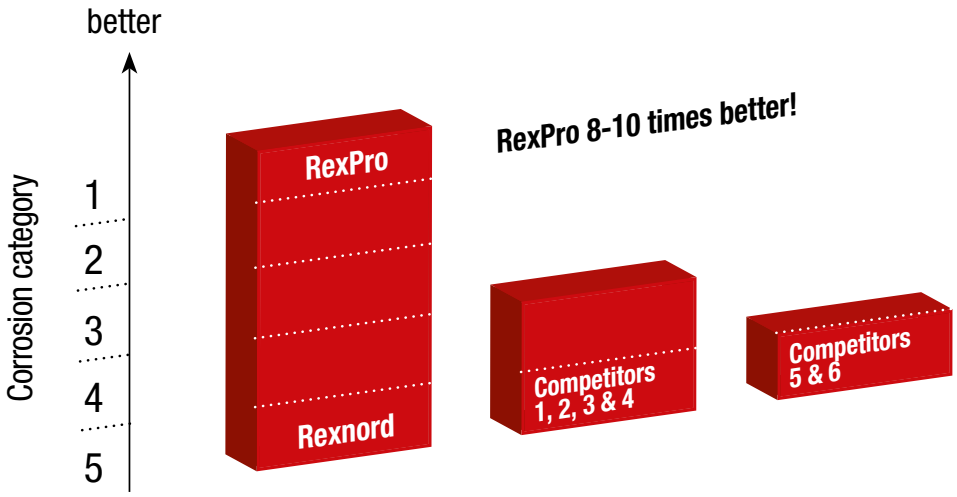

CE

Rexnord meets the requirements of Machine Directive 2006/42/EC

MODULE_04/GB/2014/03 // No liability accepted for misprints or errors!

REXNORD
The right chain!

# Roller chains - American type

High Performance from Rexnord.

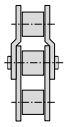

**Simplex roller chains**

CE

Rexnord meets the requirements of Machine Directive 2006/42/EC

## Excellent Corrosion Protection

- 8 - 10 times better than the best competitors
- More than 100 % better in the buckling test
- Highly versatile, also suitable for aggressive environments

## Improved Wear Resistance

- 8 - 12 % improvement in comparison to predecessor
- Great protection through RexPro lubrication
- Long working life
- High operating reliability

## High Fatigue Resistance

- Ball-drifted plate holes
- Shot-peened chain links, seam-free rollers
- High pre-loading

## Eco friendly

- Through RexPro lubrication
- No heavy metals; Teflon- and silicone-free
- Environmental management system conforms to DIN EN ISO 14001

## Simplex roller chains, DIN ISO 606 (DIN 8188)

| Chain No. | Pitch p | | Width between inner plates | Roller diameter | Pin diameter | Width over inner link | Plate depth | Transverse pitch | Pin length | Connecting pin length | Bearing area | Required minimum tensile strength DIN/ISO | Average tensile strength | Weight | Loose parts | | | | | | | | | |
|---|---|---|---|---|---|---|---|---|---|---|---|---|---|---|---|---|---|---|---|---|---|---|---|---|
| | | | $b_1$ min | $d_1$ max | $d_2$ max | $b_2$ max | g | e | $a_1$ max | $a_3$ max | A | $F_U$ | $F_B$ | q | | | | | | | | | | |
| | Inch | mm | mm | mm | mm | mm | mm | mm | mm | mm | cm² | N | N | kg/m | A | AK | AS | AT | B | C | E | L | S | U |
| 40 - 1 | 0.50 | 12.7 | 7.85 | 7.95 | 3.96 | 11.15 | 11.6 | – | 16.3 | 21.7 | 0.44 | 13 900 | 20 000 | 0.7 | | | | | x | x | x | x | | |
| 50 - 1 | 0.625 | 15.87 | 9.40 | 10.16 | 5.08 | 13.80 | 14.6 | – | 20.3 | 25.9 | 0.70 | 21 800 | 30 000 | 1.7 | x | | | | x | x | x | x | | |
| 60 - 1 | 0.75 | 19.05 | 12.57 | 11.91 | 5.94 | 17.70 | 17.7 | – | 25.7 | 31.5 | 1.05 | 31 300 | 40 000 | 1.5 | x | | | | x | x | x | x | x | |
| 80 - 1 | 1.00 | 25.4 | 15.75 | 15.88 | 7.92 | 22.50 | 23.5 | – | 33.0 | 38.9 | 1.78 | 55 600 | 65 000 | 2.6 | x | | | | x | x | x | x | x | |
| 100 - 1 | 1.25 | 31.75 | 18.90 | 19.05 | 9.53 | 27.40 | 29.2 | – | 39.4 | 44.9 | 2.61 | 87 000 | 105 000 | 3.8 | x | | | | x | | | x | x | |
| 120 - 1 | 1.50 | 38.1 | 25.22 | 22.23 | 11.10 | 35.30 | 34.4 | – | 49.8 | 56.1 | 3.92 | 125 000 | 145 000 | 5.5 | x | | | | x | | | x | x | |
| 140 - 1 | 1.75 | 44.45 | 25.22 | 25.40 | 12.70 | 37.00 | 40.8 | – | 53.4 | 59.3 | 4.70 | 170 000 | 220 000 | 7.2 | x | x | | x | x | | | x | | x |
| 160 - 1 | 2.00 | 50.8 | 31.55 | 28.58 | 14.27 | 45.00 | 47.8 | – | 63.6 | 68.9 | 6.42 | 223 000 | 260 000 | 10.3 | x | x | | x | x | | | x | | x |
| 180 - 1 | 2.25 | 57.15 | 35.48 | 35.71 | 17.46 | 50.85 | 50.0 | – | 71.3 | 80.0 | 8.87 | 281 000 | 360 000 | 14.0 | x | x | | x | x | | | x | | x |
| 200 - 1 | 2.50 | 63.5 | 37.85 | 39.68 | 19.84 | 54.70 | 60.0 | – | 78.0 | 87.5 | 10.8 | 347 000 | 400 000 | 16.8 | x | | | x | x | | | x | | x |
| 240 - 1 | 3.00 | 76.2 | 47.35 | 47.63 | 23.80 | 67.50 | 70.0 | – | 94.8 | 106.7 | 16.1 | 500 000 | 585 000 | 25.0 | x | | x | | x | | | x | | x |

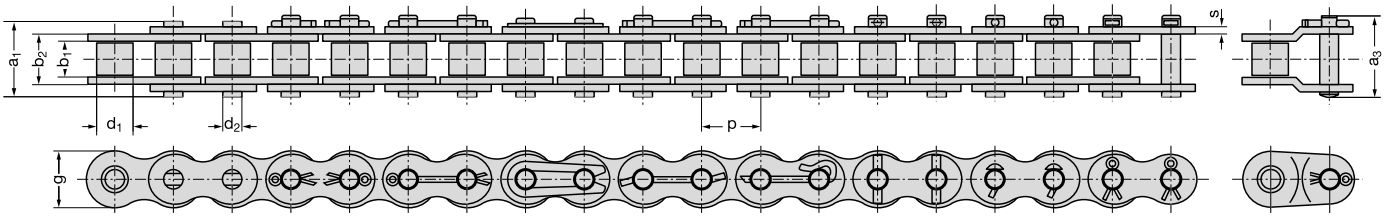


B Inner link | A Outer link | AS Outer link | AT Outer link | H Connecting link with shepherd crook cotter | AK Outer link | U Outer link with cotter | L Cranked link with cotter

MODULE_04/GB/2014/03 // No liability accepted for misprints or errors!

# Roller chains - American type

High Performance from Rexnord.

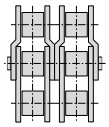

**Duplex roller chains**

## Excellent Corrosion Protection

- 8 - 10 times better than the best competitors
- More than 100 % better in the buckling test
- Highly versatile, also suitable for aggressive environments

## Improved Wear Resistance

- 8 - 12 % improvement in comparison to predecessor
- Great protection through RexPro lubrication
- Long working life
- High operating reliability

## High Fatigue Resistance

- Ball-drifted plate holes
- Shot-peened chain links, seam-free rollers
- High pre-loading

## Eco friendly

- Through RexPro lubrication
- No heavy metals; Teflon- and silicone-free
- Environmental management system conforms to DIN EN ISO 14001

CE

Rexnord meets the requirements of Machine Directive 2006/42/EC

## Duplex roller chains, DIN ISO 606 (DIN 8188)

| Chain No. | Pitch p | | Width between inner plates $b_1$ min | Roller diameter $d_1$ max | Pin diameter $d_2$ max | Width over inner link $b_2$ max | Plate depth g | Transverse pitch e | Pin length $a_1$ max | Connecting pin length $a_3$ max | Bearing area A | Required minimum tensile strength DIN/ISO $F_U$ | Average tensile strength $F_B$ | Weight q | Loose parts | | | | | | | | | |
|---|---|---|---|---|---|---|---|---|---|---|---|---|---|---|---|---|---|---|---|---|---|---|---|---|
| | Inch | mm | mm | mm | mm | mm | mm | mm | mm | mm | cm² | N | N | kg/m | A | AK | AS | AT | B | C | E | L | S | U |
| 40 - 2 | 0.50 | 12.7 | 7.85 | 7.95 | 3.96 | 11.15 | 11.6 | 14.38 | 30.7 | 36.2 | 0.88 | 27 800 | 40 000 | 1.2 | | | | | x | | x | | | |
| 50 - 2 | 0.625 | 15.875 | 9.40 | 10.16 | 5.08 | 13.80 | 14.6 | 18.11 | 38.5 | 44.0 | 1.40 | 43 600 | 60 000 | 2.0 | | | | | x | x | x | | | |
| 60 - 2 | 0.75 | 19.05 | 12.57 | 11.91 | 5.94 | 17.70 | 17.7 | 22.78 | 48.5 | 54.4 | 2.10 | 62 600 | 80 000 | 2.9 | x | | | | x | | x | | x | |
| 80 - 2 | 1.00 | 25.4 | 15.75 | 15.88 | 7.92 | 22.50 | 23.5 | 29.29 | 62.4 | 68.1 | 3.56 | 111 200 | 150 000 | 5.2 | x | | | | x | | | | x | |
| 100 - 2 | 1.25 | 31.75 | 18.90 | 19.05 | 9.53 | 27.40 | 29.2 | 35.76 | 75.3 | 87.8 | 5.22 | 174 000 | 220 000 | 7.6 | x | | | | x | | | | x | |
| 120 - 2 | 1.50 | 38.1 | 25.22 | 22.23 | 11.10 | 35.30 | 34.4 | 45.44 | 95.3 | 101.6 | 7.84 | 250 000 | 290 000 | 10.8 | x | | | | x | | | | x | |
| 140 - 2 | 1.75 | 44.45 | 25.22 | 25.40 | 12.70 | 37.00 | 40.8 | 48.87 | 103.3 | 109.6 | 9.40 | 340 000 | 440 000 | 14.2 | x | x | | | x | | | | | x |
| 160 - 2 | 2.00 | 50.8 | 31.55 | 28.58 | 14.27 | 45.00 | 47.8 | 58.55 | 122.1 | 130.1 | 12.8 | 446 000 | 490 000 | 19.5 | x | x | | | x | | | | | x |
| 180 - 2 | 2.25 | 57.15 | 35.48 | 35.71 | 17.46 | 50.85 | 50.0 | 65.84 | 136.7 | 145.4 | 17.7 | 562 000 | 680 000 | 27.0 | x | x | | | x | | | | | x |
| 200 - 2 | 2.50 | 63.5 | 37.85 | 39.68 | 19.84 | 54.70 | 60.0 | 71.55 | 149.6 | 159.2 | 21.7 | 649 000 | 800 000 | 32.7 | x | | | x | x | | | | | x |
| 240 - 2 | 3.00 | 76.2 | 47.35 | 47.63 | 23.80 | 67.50 | 70.0 | 87.83 | 182.7 | 194.7 | 32.1 | 1 000 000 | 117 000 | 49.4 | x | | x | | x | | | | | x |

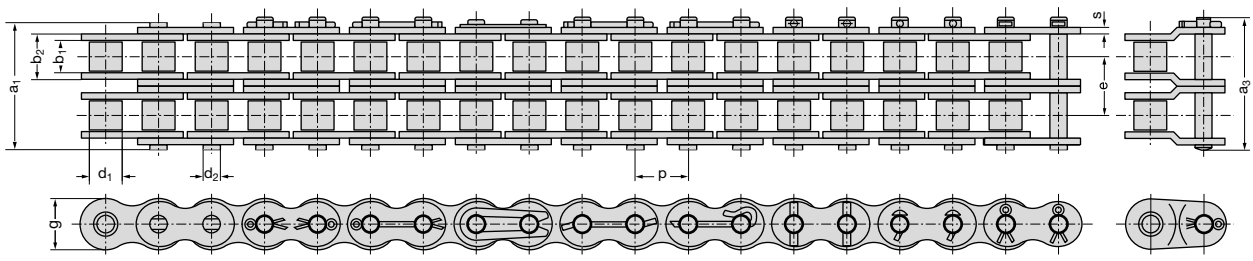


B Inner link | A Outer link | AS Outer link | AT Outer link | H Connecting link with shepherd crook cotter | AK Outer link | U Outer link with cotter | L Cranked link with cotter

MODULE_04/GB/2014/03 // No liability accepted for misprints or errors!

REXNORD
The right chain!

# Roller chains - American type

High Performance from Rexnord.

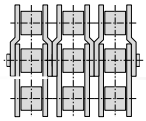

**Triplex roller chains**

CE

Rexnord meets the requirements of Machine Directive 2006/42/EC

## Excellent Corrosion Protection

- 8 - 10 times better than the best competitors
- More than 100 % better in the buckling test
- Highly versatile, also suitable for aggressive environments

## Improved Wear Resistance

- 8 - 12 % improvement in comparison to predecessor
- Great protection through RexPro lubrication
- Long working life
- High operating reliability

## High Fatigue Resistance

- Ball-drifted plate holes
- Shot-peened chain links, seam-free rollers
- High pre-loading

## Eco friendly

- Through RexPro lubrication
- No heavy metals; Teflon- and silicone-free
- Environmental management system conforms to DIN EN ISO 14001

## Triplex roller chains, DIN ISO 606 (DIN 8188)

| Chain No. | Pitch p | | Width beetween inner plates | Roller diameter | Pin diameter | Width over inner link | Plate depth | Transverse pitch | Pin length | Connecting pin length | Bearing area | Required minimum tensile strength DIN/ISO | Average tensile strength | Weight | Loose parts | | | | | | | | | |
|---|---|---|---|---|---|---|---|---|---|---|---|---|---|---|---|---|---|---|---|---|---|---|---|---|
| | | | $b_1$ min | $d_1$ max | $d_2$ max | $b_2$ max | g | e | $a_1$ max | $a_3$ max | A | $F_U$ | $F_B$ | q | | | | | | | | | | |
| | Inch | mm | mm | mm | mm | mm | mm | mm | mm | mm | cm² | N | N | kg/m | A | AK | AS | AT | B | C | E | L | S | U |
| 40 - 3 | 0.50 | 12.7 | 7.85 | 7.95 | 3.96 | 11.15 | 11.6 | 14.48 | 45.1 | 50.6 | 1.32 | 41 700 | 60 000 | 1.8 | | | | | x | | x | x | | |
| 50 - 3 | 0.625 | 15.87 | 9.40 | 10.16 | 5.08 | 13.80 | 14.6 | 18.11 | 56.7 | 62.0 | 2.10 | 65 400 | 90 000 | 3.0 | x | | | | x | | x | x | | |
| 60 - 3 | 0.75 | 19.05 | 12.57 | 11.91 | 5.94 | 17.70 | 17.7 | 22.78 | 71.4 | 77.2 | 3.15 | 93 900 | 120 000 | 4.3 | x | | | | x | | x | x | x | |
| 80 - 3 | 1.00 | 25.4 | 15.75 | 15.88 | 7.92 | 22.50 | 23.5 | 29.29 | 91.7 | 973.0 | 5.35 | 166 800 | 220 000 | 7.9 | x | | | | x | | | x | x | |
| 100 - 3 | 1.25 | 31.75 | 18.90 | 19.05 | 9.53 | 27.40 | 29.2 | 35.76 | 111.1 | 117.2 | 7.83 | 261 000 | 300 000 | 11.4 | x | | | | x | | | x | x | |
| 120 - 3 | 1.50 | 38.1 | 25.22 | 22.23 | 11.10 | 35.30 | 34.4 | 45.44 | 140.7 | 148.3 | 11.8 | 375 000 | 450 000 | 15.8 | x | | | | x | | | x | x | |
| 140 - 3 | 1.75 | 44.45 | 25.22 | 25.40 | 12.70 | 37.00 | 40.8 | 48.87 | 151.2 | 158.5 | 14.1 | 510 000 | 660 000 | 21.5 | x | x | | | x | | | x | | x |
| 160 - 3 | 2.00 | 50.8 | 31.55 | 28.58 | 14.27 | 45.00 | 47.8 | 58.55 | 180.7 | 188.7 | 19.3 | 669 000 | 790 000 | 26.3 | x | x | | | x | | | x | | x |
| 180 - 3 | 2.25 | 57.15 | 35.48 | 35.71 | 17.46 | 50.85 | 50.0 | 65.84 | 202.0 | 210.7 | 26.6 | 843 000 | 1 020 000 | 40.5 | x | x | | | x | | | x | | x |
| 200 - 3 | 2.50 | 63.5 | 37.85 | 39.68 | 19.84 | 54.70 | 60.0 | 71.55 | 221.1 | 230.7 | 32.6 | 1 041 000 | 1 200 000 | 48.8 | x | | | x | x | | | x | | x |
| 240 - 3 | 3.00 | 76.2 | 47.35 | 47.63 | 23.80 | 67.50 | 70.0 | 87.83 | 270.6 | 282.5 | 48.2 | 1 500 000 | 1 930 000 | 74.1 | x | | x | | x | | | x | | x |

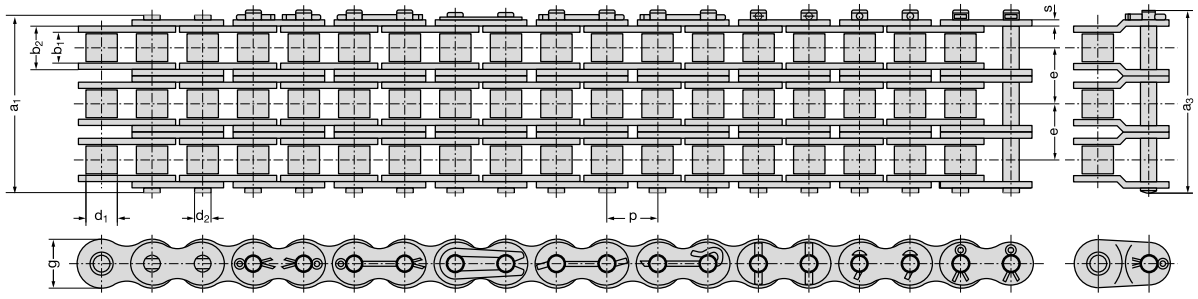


B Inner link | A Outer link | AS Outer link | AT Outer link | H Connecting link with shepherd crook cotter | AK Outer link | U Outer link with cotter | L Cranked link with cotter

MODULE_04/GB/2014/03 // No liability accepted for misprints or errors!

REXNORD
The right chain!

REXNORD
The right chain!

# Overview Rexnord roller chains

## Roller Chains

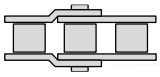

**RexPro**
RexPro lubrication
improved wear resistance
high fatigue resistance

- Outstanding protection against corrosion and wear
- Unique protection against chain joint stiffness
- Extremely eco-friendly

**RexAthletic**
good loading capacity
extended lubrication intervals

- Durable and low-maintenance
- Longer servicing intervals
- High loading capacity

**RexCarbon**
no lubrication
low noise

- Maintenance-free
- Low noise
- Eco-friendly

**RexPlus**
excellent corrosion resistance
high reliability

- Excellent resistance to rust and acids
- Highly reliable
- Fulfils hygiene requirements
- NSF H1 certification

**RexPlusCarbon**
no lubrication
excellent corrosion resistance

- Combination of RexPlus and RexCarbon
- Excellent resistance to rust and acids
- Maintenance-free
- NSF H1 certification

**RexHiPro**
good corrosion resistance
excellent loading capacity

- Outstanding corrosion resistance
- Long service life
- High loading capacity

**Link-Belt®**
a brand of REXNORD

- The optimum choice for light and medium duty
- Good cost-benefit ratio
- High availability

**RexProX**
RexPro lubrication
improved wear resistance
high fatigue resistance

- Extremely high loading capacity
- Long service life
- Outstanding protection against corrosion and wear

## Leaf Chains

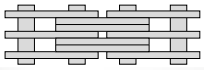

**RexPro**
RexPro lubrication
improved wear resistance
high fatigue resistance

- Outstanding protection against corrosion and wear
- Unique protection against chain joint stiffness
- Extremely eco-friendly

**RexHiPro**
good corrosion resistance
excellent loading capacity

- Outstanding corrosion resistance
- Long service life
- High loading capacity

**RexAthletic**
good loading capacity
extended lubrication intervals

- Durable and low-maintenance
- Longer servicing intervals
- High loading capacity
- Extreme wear resistance for double-length service life

**REXDL®**
a brand of REXNORD

- The optimum choice for light and medium duty
- Good cost-benefit ratio
- Good availability

Rexnord Kette GmbH · Industriestr. 1 · 57518 Betzdorf · Tel (49) 2741 284 0 · rexinfo@rexnord.com · www.rexnord-kette.de
Rexnord Corporate Headquarters · 4701 W. Greenfield Avenue · Milwaukee, WI 53214-5310 · Phone: (414) 643 3000

MODULE_04/GB/2014/03 // No liability accepted for misprints or errors!

REXNORD
The right chain!

High Performance from Rexnord

# Roller chains | H-Series | American type

REXNORD

**RexPro**

RexPro lubrication
improved wear resistance
high fatigue resistance

MODULE_04/GB/2014/03 // No liability accepted for misprints or errors!

REXNORD
The right chain!

**Highly robust & durable**

through reinforced link plates

# H-Series - American type

High Performance from Rexnord.

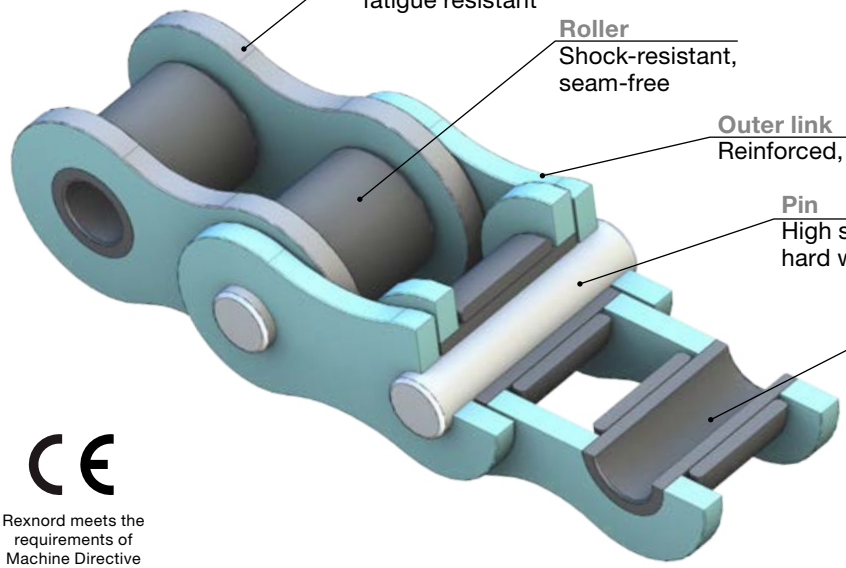


CE

Rexnord meets the requirements of Machine Directive 2006/42/EC

## APPLICATIONS

- Drilling rigs
- Machinery for road excavation & construction
- Agriculture and forestry

## CHARACTERISTICS

- Fulfils the stringent demands set by the excellent RexPro standards
- Enlarged bearing area
- Higher breaking strength
- 40% higher fatigue resistance (loading capacity)
- Compatible with European type

## ADVANTAGES

- For high-performance power transmission
- Very high impact strength
- Very robust, even under the toughest conditions

## LUBRICATION

- RexPro lubrication without heavy metals for improved protection
- Operating temperature: -30°C to +130°C (can be extended from -40°C to + 250°C)
- Very good suface adhesion; remains drip resistant even at high temperatures
- No heavy metals; Teflon- and silicone-free

MODULE_04/GB/2014/03 // No liability accepted for misprints or errors!

# RexPro - High performance from Rexnord

### Excellent Corrosion Protection
- 8 - 10 times better than the best competitors
- More than 100 % better in the buckling test
- Highly versatile, also suitable for aggressive environments

### Improved Wear Resistance
- 8 - 12 % improvement in comparison to predecessor
- Great protection through RexPro lubrication
- Long working life
- High operating reliability

### High Fatigue Resistance
- Ball-drifted plate holes
- Shot-peened chain links, seam-free rollers
- High pre-loading

### Eco friendly
- Through RexPro lubrication
- No heavy metals; Teflon- and silicone-free
- Environmental management system conforms to DIN EN ISO 14001

# Salt spray test in accordance with DIN EN ISO 9227

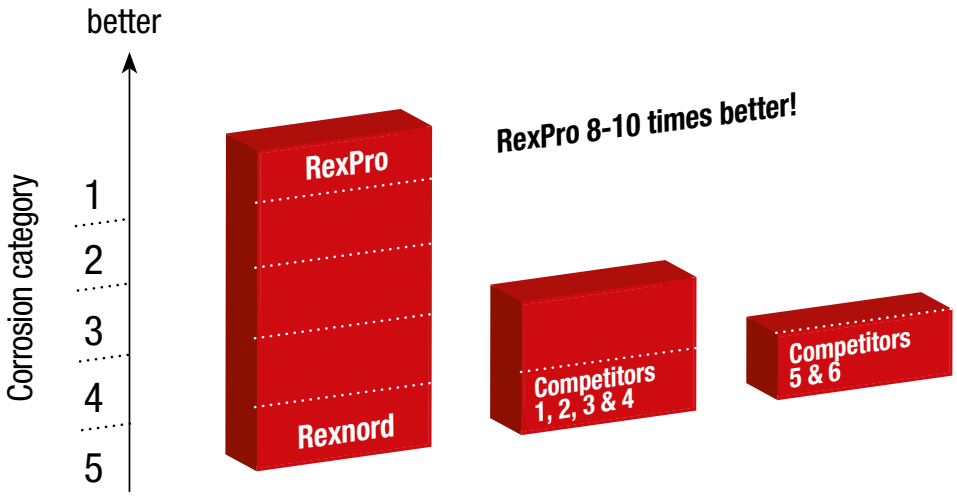

CE

Rexnord meets the requirements of Machine Directive 2006/42/EC

MODULE_04/GB/2014/03 // No liability accepted for misprints or errors!

# H-Series - American type

High Performance from Rexnord.

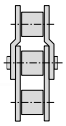

**Simplex roller chains**

CE

Rexnord meets the requirements of Machine Directive 2006/42/EC

## Applications & Characteristics

- For heavy-duty drives and lifting purposes
- High loading capacity

## Maintenance & Service life

- Very robust
- Long service life

## Eco friendly

- Through RexPro lubrication
- No heavy metals; Teflon- and silicone-free
- Environmental management system conforms to DIN EN ISO 14001

## Simplex roller chains, DIN ISO 606

Heavy Series with increased fatigue resistance (thicker plates)

| Chain No. | Pitch p | | Width between inner plates $b_1$ min | Roller diameter $d_1$ max | Pin diameter $d_2$ max | Width over inner link $b_2$ max | Plate depth s | Plate depth g | Transverse pitch e | Pin length $a_1$ max | Connecting pin length $a_3$ max | Bearing area A | Required minimum tensile strength DIN/ISO $F_U$ | Average tensile strength $F_B$ | Weight q | Loose parts | | | | | | | | |
|---|---|---|---|---|---|---|---|---|---|---|---|---|---|---|---|---|---|---|---|---|---|---|---|---|
| | Inch | mm | mm | mm | mm | mm | mm | mm | mm | mm | mm | cm² | N | N | kg/m | A | B | AK | AS | AT | H | L | S | U |
| 60 H - 1 | 0.75 | 19.05 | 12.57 | 11.91 | 5.94 | 19.35 | 3.05 | 17.7 | – | 28.8 | 32.0 | 1.15 | 31 300 | 45 000 | 2.0 | x | x | | | | | | x | |
| 80 H - 1 | 1.00 | 25.4 | 15.75 | 15.88 | 7.92 | 24.30 | 4.0 | 23.5 | – | 35.9 | 41.0 | 1.94 | 55 600 | 80 000 | 3.2 | x | x | | | | | | x | |
| 100 H - 1 | 1.25 | 31.75 | 18.90 | 19.05 | 9.53 | 29.00 | 4.7 | 29.2 | – | 42.8 | 48.2 | 2.76 | 87 000 | 45 000 | 4.4 | x | x | | | | | | x | |
| 120 H - 1 | 1.50 | 38.1 | 25.22 | 22.23 | 11.10 | 37.00 | 5.5 | 34.4 | – | 53.0 | 59.0 | 4.12 | 125 000 | 150 000 | 6.4 | x | x | | | | | | x | |
| 140 H - 1 | 1.75 | 44.45 | 25.22 | 25.40 | 12.70 | 38.70 | 6.3 | 40.8 | – | 56.6 | 62.6 | 4.91 | 170 000 | 207 000 | 8.3 | x | x | | | x | | | x | x |
| 160 H - 1 | 2.00 | 50.8 | 31.55 | 28.58 | 14.27 | 46.90 | 7.0 | 47.8 | – | 67.2 | 72.3 | 6.69 | 223 000 | 260 000 | 11.5 | x | x | | | x | | | x | x |
| 200 H - 1 | 2.50 | 63.5 | 37.85 | 39.68 | 19.84 | 57.60 | 9.5 | 60.0 | – | 84.0 | 93.5 | 11.4 | 347 000 | 420 000 | 20.0 | x | x | | | x | | | x | x |

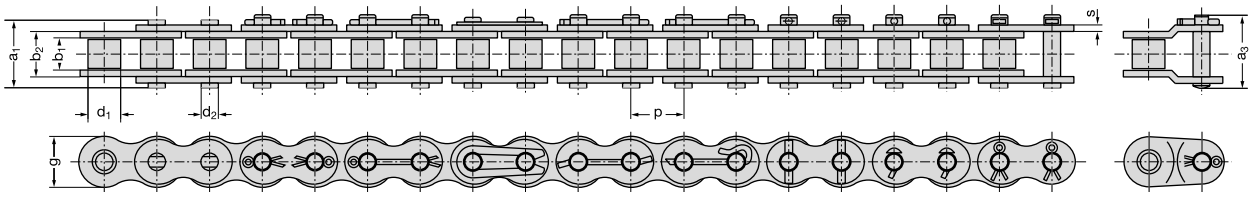


B Inner link | A Outer link | AS Outer link | AT Outer link | H Connecting link with shepherd crook cotter | AK Outer link | U Outer link with cotter | L Cranked link with cotter

MODULE_04/GB/2014/03 // No liability accepted for misprints or errors!

# H-Series - American type

High Performance from Rexnord.

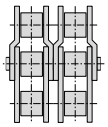

**Duplex roller chains**

## Applications & Characteristics

- For heavy-duty drives and lifting purposes
- High loading capacity

## Maintenance & Service life

- Very robust
- Long service life

## Eco friendly

- Through RexPro lubrication
- No heavy metals; Teflon- and silicone-free
- Environmental management system conforms to DIN EN ISO 14001

CE

Rexnord meets the requirements of Machine Directive 2006/42/EC

## Duplex roller chains, DIN ISO 606

Heavy Series with increased fatigue resistance (thicker plates)

| Chain No. | Pitch p | | Width beetween inner plates $b_1$ min | Roller diameter $d_1$ max | Pin diameter $d_2$ max | Width over inner link $b_2$ max | Plate depth s | Plate depth g | Transverse pitch e | Pin length $a_1$ max | Connecting pin length $a_3$ max | Bearing area A | Required minimum tensile strength DIN/ISO $F_U$ | Average tensile strength $F_B$ | Weight q | Loose parts | | | | | | | | |
|---|---|---|---|---|---|---|---|---|---|---|---|---|---|---|---|---|---|---|---|---|---|---|---|---|
| | Inch | mm | mm | mm | mm | mm | mm | mm | mm | mm | mm | cm² | N | N | kg/m | A | B | AK | AS | AT | H | L | S | U |
| 60 H - 2 | 0.75 | 19.05 | 12.57 | 11.91 | 5.94 | 19.35 | 3.05 | 17.7 | 26.10 | 54.9 | 58.0 | 2.30 | 62 600 | 95 000 | 4.0 | x | x | | | | | | x | |
| 80 H - 2 | 1.00 | 25.4 | 15.75 | 15.88 | 7.92 | 24.30 | 4.0 | 23.5 | 32.60 | 68.6 | 73.7 | 3.88 | 112 200 | 100 000 | 6.3 | x | x | | | | | | x | |
| 100 H - 2 | 1.25 | 31.75 | 18.90 | 19.05 | 9.53 | 29.00 | 4.7 | 29.2 | 39.12 | 82.0 | 97.8 | 5.52 | 174 000 | 290 000 | 9.0 | x | x | | | | | | x | |
| 120 H - 2 | 1.50 | 38.1 | 25.22 | 22.23 | 11.10 | 37.00 | 5.5 | 34.4 | 48.91 | 101.8 | 109.5 | 8.36 | 250 000 | 300 000 | 12.6 | x | x | | | | | | x | |
| 140 H - 2 | 1.75 | 44.45 | 25.22 | 25.40 | 12.70 | 38.70 | 6.3 | 40.8 | 52.20 | 108.7 | 116.0 | 9.82 | 340 000 | 414 000 | 16.2 | x | x | x | | | | | x | x |
| 160 H - 2 | 2.00 | 50.8 | 31.55 | 28.58 | 14.27 | 46.90 | 7.0 | 47.8 | 61.89 | 128.6 | 136.8 | 13.4 | 446 000 | 520 000 | 22.0 | x | x | x | | | | | x | x |
| 200 H - 2 | 2.50 | 63.5 | 37.85 | 39.68 | 19.84 | 57.60 | 9.5 | 60.0 | 78.30 | 161.6 | 171.2 | 22.8 | 694 000 | 840 000 | 39.0 | x | x | x | | x | | | x | x |

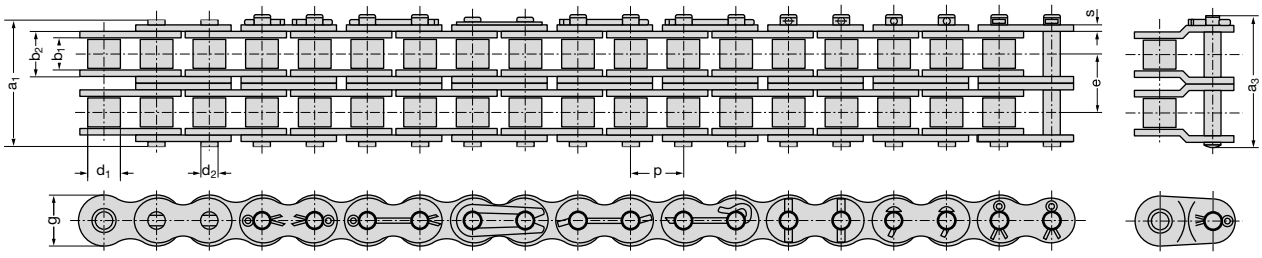


B Inner link | A Outer link | AS Outer link | AT Outer link | H Connecting link with shepherd crook cotter | AK Outer link | U Outer link with cotter | L Cranked link with cotter

MODULE_04/GB/2014/03 // No liability accepted for misprints or errors!

REXNORD
The right chain!

# H-Series - American type

High Performance from Rexnord.

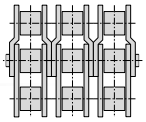

**Triplex roller chains**

CE

Rexnord meets the requirements of Machine Directive 2006/42/EC

## Applications & Characteristics

- For heavy-duty drives and lifting purposes
- High loading capacity

## Maintenance & Service life

- Very robust
- Long service life

## Eco friendly

- Through RexPro lubrication
- No heavy metals; Teflon- and silicone-free
- Environmental management system conforms to DIN EN ISO 14001

## Triplex roller chains, DIN ISO 606

Heavy Series with increased fatigue resistance (thicker plates)

| Chain No. | Pitch p | | Width between inner plates $b_1$ min | Roller diameter $d_1$ max | Pin diameter $d_2$ max | Width over inner link $b_2$ max | Plate depth s | Plate depth g | Transverse pitch e | Pin length $a_1$ max | Connecting pin length $a_3$ max | Bearing area A | Required minimum tensile strength DIN/ISO $F_U$ | Average tensile strength $F_B$ | Weight q | Loose parts | | | | | | | | |
|---|---|---|---|---|---|---|---|---|---|---|---|---|---|---|---|---|---|---|---|---|---|---|---|---|
| | Inch | mm | mm | mm | mm | mm | mm | mm | mm | mm | mm | cm² | N | N | kg/m | A | B | AK | AS | AT | H | L | S | U |
| 60 H - 3 | 0.75 | 19.05 | 12.57 | 11.91 | 5.94 | 19.35 | 3.05 | 17.7 | 26.10 | 81.1 | 84.4 | 3.45 | 93 900 | 135 000 | 5.8 | x | x | | | | | | x | |
| 80 H - 3 | 1.00 | 25.4 | 15.75 | 15.88 | 7.92 | 24.30 | 4.0 | 23.5 | 32.60 | 101.2 | 106.3 | 5.82 | 166 800 | 240 000 | 9.6 | x | x | | | | | | x | |
| 100 H - 3 | 1.25 | 31.75 | 18.90 | 19.05 | 9.53 | 29.00 | 4.7 | 29.2 | 39.12 | 120.0 | 126.6 | 8.30 | 261 000 | 345 000 | 13.4 | x | x | | | | | | x | |
| 120 H - 3 | 1.50 | 38.1 | 25.22 | 22.23 | 11.10 | 37.00 | 5.5 | 34.4 | 48.91 | 150.8 | 158.7 | 12.3 | 375 000 | 450 000 | 19.5 | x | x | | | | | | x | |
| 140 H - 3 | 1.75 | 44.45 | 25.22 | 25.40 | 12.70 | 38.70 | 6.3 | 40.8 | 52.20 | 160.9 | 168.3 | 14.3 | 510 000 | 621 000 | 24.7 | x | x | x | | | | | x | x |
| 160 H - 3 | 2.00 | 50.8 | 31.55 | 28.58 | 14.27 | 46.90 | 7.0 | 47.8 | 61.89 | 198.0 | 198.7 | 20.1 | 669 000 | 780 000 | 29.4 | x | x | x | | | | | x | x |
| 200 H - 3 | 2.50 | 63.5 | 37.85 | 39.68 | 19.84 | 57.60 | 9.5 | 60.0 | 78.30 | 239.1 | 248.7 | 34.3 | 1 041 000 | 1 350 000 | 58.0 | x | x | | | x | | | x | x |

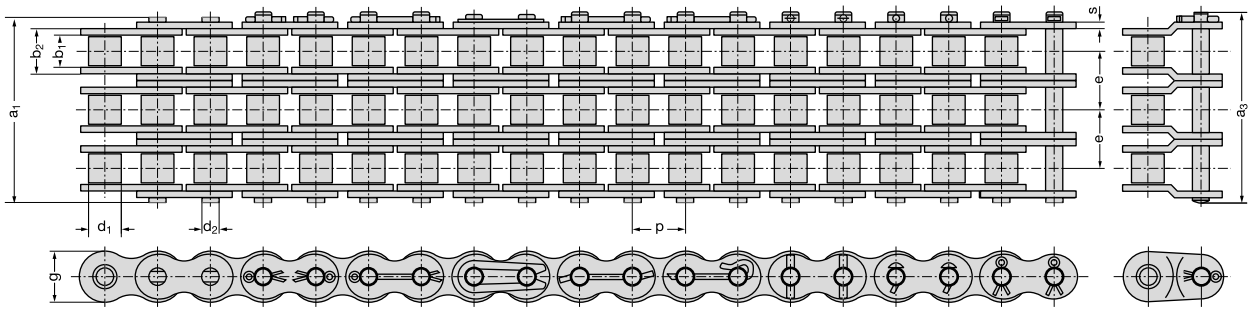


B Inner link | A Outer link | AS Outer link | AT Outer link | H Connecting link with shepherd crook cotter | AK Outer link | U Outer link with cotter | L Cranked link with cotter

MODULE_04/GB/2014/03 // No liability accepted for misprints or errors!

REXNORD
The right chain!

REXNORD
The right chain!

# Overview Rexnord roller chains

## Roller Chains

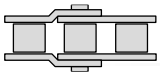

**RexPro**
RexPro lubrication
improved wear resistance
high fatigue resistance

- Outstanding protection against corrosion and wear
- Unique protection against chain joint stiffness
- Extremely eco-friendly

**RexAthletic**
good loading capacity
extended lubrication intervals

- Durable and low-maintenance
- Longer servicing intervals
- High loading capacity

**RexCarbon**
no lubrication
low noise

- Maintenance-free
- Low noise
- Eco-friendly

**RexPlus**
excellent corrosion resistance
high reliability

- Excellent resistance to rust and acids
- Highly reliable
- Fulfils hygiene requirements
- NSF H1 certification

**RexPlusCarbon**
no lubrication
excellent corrosion resistance

- Combination of RexPlus and RexCarbon
- Excellent resistance to rust and acids
- Maintenance-free
- NSF H1 certification

**RexHiPro**
good corrosion resistance
excellent loading capacity

- Outstanding corrosion resistance
- Long service life
- High loading capacity

**Link-Belt®**
a brand of REXNORD

- The optimum choice for light and medium duty
- Good cost-benefit ratio
- High availability

**RexProX**
RexPro lubrication
improved wear resistance
high fatigue resistance

- Extremely high loading capacity
- Long service life
- Outstanding protection against corrosion and wear

## Leaf Chains

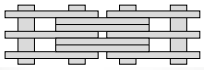

**RexPro**
RexPro lubrication
improved wear resistance
high fatigue resistance

- Outstanding protection against corrosion and wear
- Unique protection against chain joint stiffness
- Extremely eco-friendly

**RexHiPro**
good corrosion resistance
excellent loading capacity

- Outstanding corrosion resistance
- Long service life
- High loading capacity

**RexAthletic**
good loading capacity
extended lubrication intervals

- Durable and low-maintenance
- Longer servicing intervals
- High loading capacity
- Extreme wear resistance for double-length service life

**REXDL®**
a brand of REXNORD

- The optimum choice for light and medium duty
- Good cost-benefit ratio
- Good availability

Rexnord Kette GmbH · Industriestr. 1 · 57518 Betzdorf · Tel (49) 2741 284 0 · rexinfo@rexnord.com · www.rexnord-kette.de
Rexnord Corporate Headquarters · 4701 W. Greenfield Avenue · Milwaukee, WI 53214-5310 · Phone: (414) 643 3000

MODULE_04/GB/2014/03 // No liability accepted for misprints or errors!

REXNORD
The right chain!

High Performance from Rexnord

# Roller chains | HE-Series | American Type

MODULE_04/GB/2014/03 // No liability accepted for misprints or errors!

REXNORD
The right chain!

**Highly robust**

through reinforced link plates and pins

# HE-Series - American type

High Performance from Rexnord.

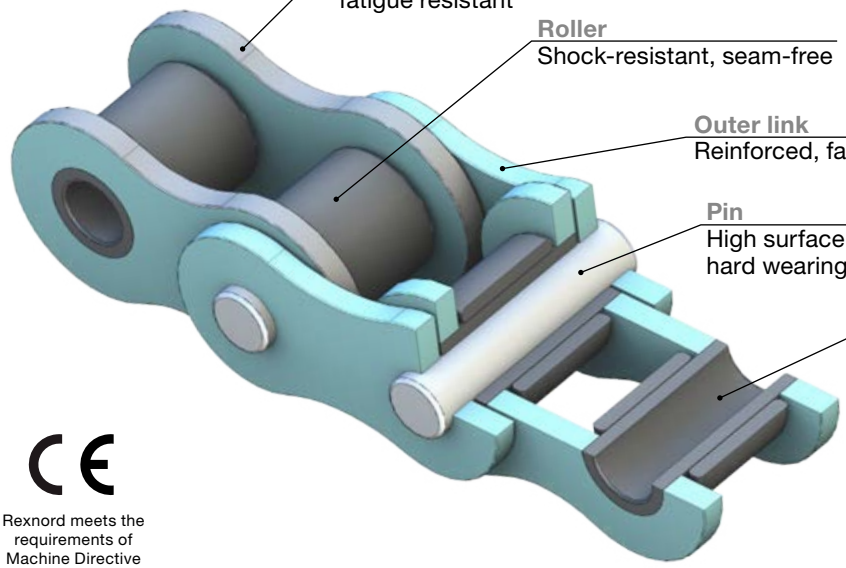


CE

Rexnord meets the requirements of Machine Directive 2006/42/EC

## APPLICATIONS

- Drilling rigs
- Machinery for road excavation & construction
- Agriculture and forestry

## CHARACTERISTICS

- Fulfils the stringent demands set by the excellent RexPro standards
- Enlarged bearing area
- Higher breaking strength
- 40% higher fatigue resistance (loading capacity)
- Compatible with European type

## ADVANTAGES

- For high-performance power transmission
- Very high impact strength
- Very robust, even under the toughest conditions
- Optional additional wear resistance through induction hardening

## LUBRICATION

- RexPro lubrication without heavy metals for improved protection
- Operating temperature: -30°C to +130°C (can be extended from -40°C to + 250°C)
- Very good suface adhesion; remains drip resistant even at high temperatures
- No heavy metals; Teflon- and silicone-free

MODULE_04/GB/2014/03 // No liability accepted for misprints or errors!

# RexPro - High performance from Rexnord

### Excellent Corrosion Protection
- 8 - 10 times better than the best competitors
- More than 100 % better in the buckling test
- Highly versatile, also suitable for aggressive environments

### Improved Wear Resistance
- 8 - 12 % improvement in comparison to predecessor
- Great protection through RexPro lubrication
- Long working life
- High operating reliability

### High Fatigue Resistance
- Ball-drifted plate holes
- Shot-peened chain links, seam-free rollers
- High pre-loading

### Eco friendly
- Through RexPro lubrication
- No heavy metals; Teflon- and silicone-free
- Environmental management system conforms to DIN EN ISO 14001

# Salt spray test in accordance with DIN EN ISO 9227

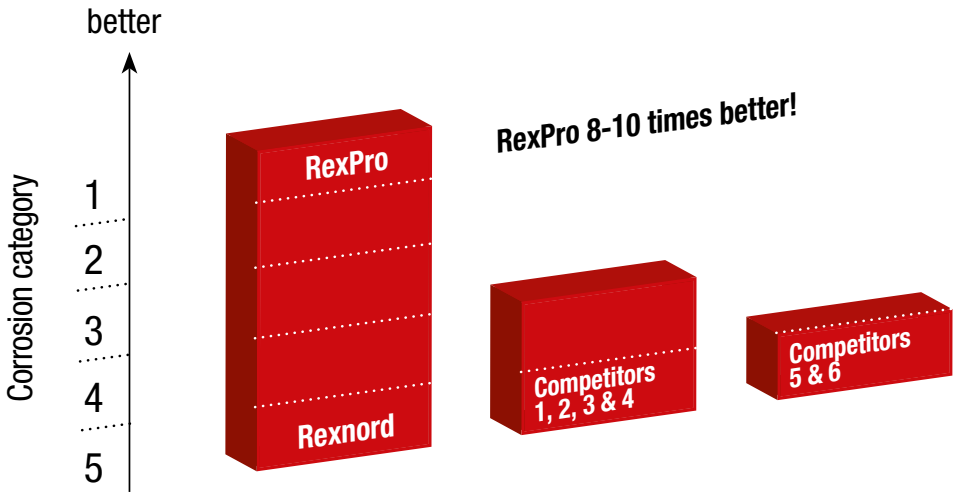

CE

Rexnord meets the requirements of Machine Directive 2006/42/EC

MODULE_04/GB/2014/03 // No liability accepted for misprints or errors!

REXNORD
The right chain!

# HE - Series - American type

High Performance from Rexnord.

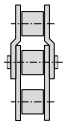

**Simplex roller chains**

CE

Rexnord meets the requirements of Machine Directive 2006/42/EC

## Applications & Characteristics

- For heavy-duty drives and lifting purposes
- High loading capacity
- High impact strength
- Highest breaking strength

## Maintenance & Service life

- Very robust
- Long service life

## Eco friendly

- Through RexPro lubrication
- No heavy metals; Teflon- and silicone-free
- Environmental management system conforms to DIN EN ISO 14001

## Simplex roller chains, DIN ISO 606

Heavy Series with increased fatigue resistance (thicker plates) and higher breaking strength

| Chain No. | Pitch p | | Width beetween inner plates $b_1$ min | Roller diameter $d_1$ max | Pin diameter $d_2$ max | Width over inner link $b_2$ max | Plate depth s | Plate depth g | Transverse pitch e | Pin length $a_1$ max | Connecting pin length $a_3$ max | Bearing area A | Required minimum tensile strength DIN / ISO $F_U$ | Average tensile strength $F_B$ | Weight q | Components | | | | | | | | |
|---|---|---|---|---|---|---|---|---|---|---|---|---|---|---|---|---|---|---|---|---|---|---|---|---|
| | inch | mm | mm | mm | mm | mm | mm | mm | mm | mm | mm | cm² | N | N | kg/m | A | B | AK | AS | AT | H | L | S | U |
| 60 HE - 1 | 0.75 | 19.05 | 12.57 | 11.91 | 5.94 | 19.35 | 3.05 | 17.7 | – | 28.8 | 32.0 | 1.15 | 42 000 | 56 000 | 2.0 | x | x | | | | | | x | |
| 80 HE - 1 | 1.00 | 25.4 | 15.75 | 15.88 | 7.92 | 24.30 | 4.0 | 23.3 | – | 35.9 | 41.0 | 1.94 | 75 600 | 96 000 | 3.2 | x | x | | | | | | x | |
| 100 HE - 1 | 1.25 | 31.75 | 18.90 | 19.05 | 9.53 | 29.00 | 4.7 | 29.2 | – | 42.8 | 48.2 | 2.76 | 113 400 | 138 000 | 4.4 | x | x | | | | | | x | |
| 120 HE - 1 | 1.50 | 38.1 | 25.22 | 22.23 | 11.10 | 37.00 | 5.5 | 34.4 | – | 53.0 | 59.0 | 4.10 | 155 700 | 200 000 | 6.4 | x | x | | | | | | x | |
| 140 HE -1 | 1.75 | 44.45 | 25.22 | 25.40 | 12.70 | 38.70 | 6.3 | 40.8 | – | 56.6 | 62.6 | 4.94 | 209 100 | 250 000 | 8.3 | x | x | | | x | | | x | x |
| 160 HE - 1 | 2.00 | 50.8 | 31.55 | 28.58 | 14.27 | 46.90 | 7.0 | 47.8 | – | 67.2 | 72.3 | 6.69 | 266 900 | 325 000 | 11.8 | x | x | | | x | | | x | x |
| 200 HE - 1 | 2.50 | 63.5 | 37.85 | 39.68 | 19.84 | 57.60 | 9.5 | 60.0 | – | 84.0 | 93.5 | 11.4 | 405 000 | 580 000 | 20.0 | x | x | | | x | | | x | x |

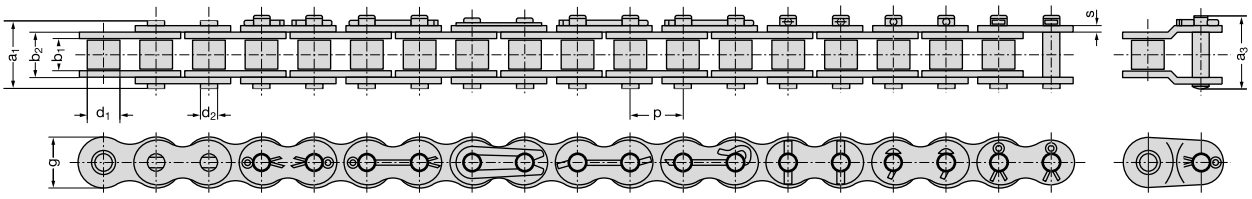


| B | A | AS | AT | H | AK | U | L |
|---|---|---|---|---|---|---|---|
| Inner link | Outer link | Outer link | Outer link | Connecting link with shepherd crook cotter | Outer link | Outer link with cotter | Cranked link with cotter |

MODULE_04/GB/2014/03 // No liability accepted for misprints or errors!

# HE - Series - American type

High Performance from Rexnord.

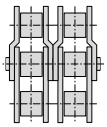

**Duplex roller chains**

## Applications & Characteristics

- For heavy-duty drives and lifting purposes
- High loading capacity
- High impact strength
- Highest breaking strength

## Maintenance & Service life

- Very robust
- Long service life

## Eco friendly

- Through RexPro lubrication
- No heavy metals; Teflon- and silicone-free
- Environmental management system conforms to DIN EN ISO 14001

CE

Rexnord meets the requirements of Machine Directive 2006/42/EC

## Duplex roller chains, DIN ISO 606

Heavy Series with increased fatigue resistance (thicker plates) and higher breaking strength

| Chain No. | Pitch p | | Width beetween inner plates $b_1$ min | Roller diameter $d_1$ max | Pin diameter $d_2$ max | Width over inner link $b_2$ max | Plate depth s | Plate depth g | Transverse pitch e | Pin length $a_1$ max | Connecting pin length $a_3$ max | Bearing area A | Required minimum tensile strength DIN/ISO $F_U$ | Average tensile strength $F_B$ | Weight q | Loose parts | | | | | | | | |
|---|---|---|---|---|---|---|---|---|---|---|---|---|---|---|---|---|---|---|---|---|---|---|---|---|
| | Inch | mm | mm | mm | mm | mm | mm | mm | mm | mm | mm | cm² | N | N | kg/m | A | B | AK | AS | AT | H | L | S | U |
| 80 HE - 2 | 1.00 | 25.4 | 15.75 | 15.88 | 7.92 | 24.3 | 4.0 | 23.5 | 32.60 | 68.6 | 73.7 | 3.88 | 151 200 | 192 000 | 5.3 | x | x | | | | | | x | |
| 100 HE - 2 | 1.25 | 31.75 | 18.90 | 19.05 | 9.53 | 29.0 | 4.7 | 29.2 | 39.12 | 82.0 | 87.8 | 5.52 | 226 800 | 276 000 | 9.0 | x | x | | | | | | x | |
| 120 HE - 2 | 1.50 | 38.1 | 25.22 | 22.23 | 11.10 | 37.0 | 5.5 | 34.4 | 48.91 | 101.8 | 109.5 | 8.36 | 311 400 | 400 000 | 12.6 | x | x | | | | | | x | |
| 140 HE - 2 | 1.75 | 44.45 | 25.22 | 25.40 | 12.70 | 38.7 | 6.3 | 40.8 | 52.20 | 108.7 | 116.0 | 9.82 | 418 200 | 500 000 | 15.8 | x | x | x | | | | | x | x |
| 160 HE - 2 | 2.00 | 50.8 | 31.55 | 28.58 | 14.27 | 46.9 | 7.0 | 47.8 | 61.89 | 128.6 | 136.8 | 13.4 | 533 800 | 650 000 | 22.0 | x | x | x | | | | | x | x |
| 200 HE - 2 | 2.50 | 63.5 | 37.85 | 39.68 | 19.84 | 57.6 | 9.5 | 60.0 | 78.30 | 161.6 | 171.2 | 22.8 | 810 000 | 860 000 | 39.0 | x | x | | | x | | | x | x |

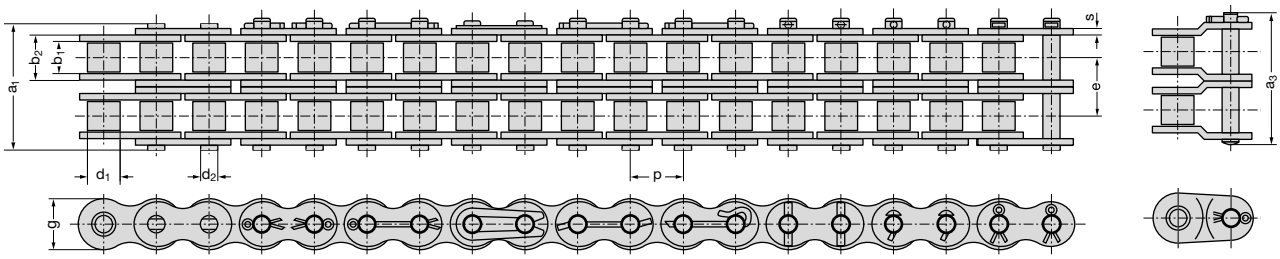


B Inner link | A Outer link | AS Outer link | AT Outer link | H Connecting link with shepherd crook cotter | AK Outer link | U Outer link with cotter | L Cranked link with cotter

MODULE_04/GB/2014/03 // No liability accepted for misprints or errors!

REXNORD
The right chain!

# HE - Series - American type

High Performance from Rexnord.

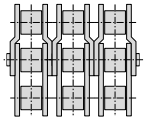

**Triplex roller chains**

CE

Rexnord meets the requirements of Machine Directive 2006/42/EC

## Applications & Characteristics

- For heavy-duty drives and lifting purposes
- High loading capacity
- High impact strength
- Highest breaking strength

## Maintenance & Service life

- Very robust
- Long service life

## Eco friendly

- Through RexPro lubrication
- No heavy metals; Teflon- and silicone-free
- Environmental management system conforms to DIN EN ISO 14001

## Triplex roller chains, DIN ISO 606

Heavy Series with increased fatigue resistance (thicker plates) and higher breaking strength

| Chain No. | Pitch p | | Width beetween inner plates $b_1$ min | Roller diameter $d_1$ max | Pin diameter $d_2$ max | Width over inner link $b_2$ max | Plate depth s | Plate depth g | Transverse pitch e | Pin length $a_1$ max | Connecting pin length $a_3$ max | Bearing area A | Required minimum tensile strength DIN/ISO $F_U$ | Average tensile strength $F_B$ | Weight q | Components | | | | | | | | |
|---|---|---|---|---|---|---|---|---|---|---|---|---|---|---|---|---|---|---|---|---|---|---|---|---|
| | Inch | mm | mm | mm | mm | mm | mm | mm | mm | mm | mm | cm² | N | N | kg/m | A | B | AK | AS | AT | H | L | S | U |
| 80 HE - 3 | 1.00 | 25.4 | 15.75 | 15.88 | 7.92 | 24.3 | 4.0 | 23.5 | 32.60 | 101.2 | 106.3 | 5.82 | 226 800 | 288 000 | 9.6 | x | x | | | | | | x | |
| 100 HE - 3 | 1.25 | 31.75 | 18.90 | 19.05 | 9.53 | 29.0 | 4.7 | 29.2 | 39.12 | 120.0 | 126.6 | 8.30 | 340 200 | 414 600 | 13.4 | x | x | | | | | | x | |
| 120 HE - 3 | 1.50 | 38.1 | 25.22 | 22.23 | 11.10 | 37.0 | 5.5 | 34.4 | 48.91 | 150.8 | 158.7 | 12.3 | 467 100 | 600 000 | 18.5 | x | x | | | | | | x | |
| 140 HE - 3 | 1.75 | 44.45 | 25.22 | 25.40 | 12.70 | 38.7 | 6.3 | 40.8 | 52.20 | 160.9 | 168.3 | 14.3 | 627 300 | 750 000 | 24.7 | x | x | x | | | | | x | x |
| 160 HE - 3 | 2.00 | 50.8 | 31.55 | 28.58 | 14.27 | 46.9 | 7.0 | 47.8 | 61.89 | 198.0 | 198.7 | 20.1 | 800 700 | 975 000 | 29.4 | x | x | x | | | | | x | x |
| 200 HE - 3 | 2.50 | 63.5 | 37.85 | 39.68 | 19.84 | 57.6 | 9.5 | 60.0 | 78.30 | 239.1 | 248.7 | 34.3 | 1215 000 | 1 500 000 | 58.0 | x | x | | | x | | | x | x |

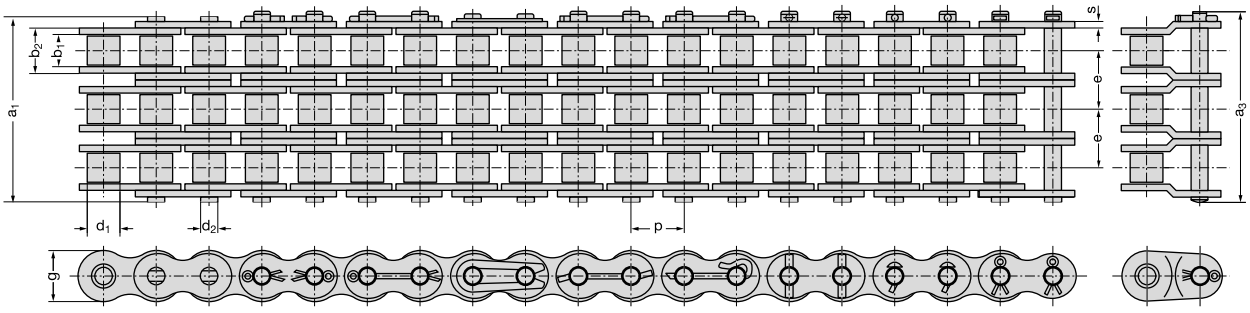


B Inner link | A Outer link | AS Outer link | AT Outer link | H Connecting link with shepherd crook cotter | AK Outer link | U Outer link with cotter | L Cranked link with cotter

MODULE_04/GB/2014/03 // No liability accepted for misprints or errors!

REXNORD
The right chain!

REXNORD
The right chain!

# Overview Rexnord roller chains

## Roller Chains

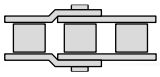

**RexPro**
RexPro lubrication
improved wear resistance
high fatigue resistance

- Outstanding protection against corrosion and wear
- Unique protection against chain joint stiffness
- Extremely eco-friendly

**RexAthletic**
good loading capacity
extended lubrication intervals

- Durable and low-maintenance
- Longer servicing intervals
- High loading capacity

**RexCarbon**
no lubrication
low noise

- Maintenance-free
- Low noise
- Eco-friendly

**RexPlus**
excellent corrosion resistance
high reliability

- Excellent resistance to rust and acids
- Highly reliable
- Fulfils hygiene requirements
- NSF H1 certification

**RexPlusCarbon**
no lubrication
excellent corrosion resistance

- Combination of RexPlus and RexCarbon
- Excellent resistance to rust and acids
- Maintenance-free
- NSF H1 certification

**RexHiPro**
good corrosion resistance
excellent loading capacity

- Outstanding corrosion resistance
- Long service life
- High loading capacity

**Link-Belt®**
a brand of REXNORD

- The optimum choice for light and medium duty
- Good cost-benefit ratio
- High availability

**RexProX**
RexPro lubrication
improved wear resistance
high fatigue resistance

- Extremely high loading capacity
- Long service life
- Outstanding protection against corrosion and wear

## Leaf Chains

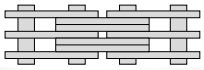

**RexPro**
RexPro lubrication
improved wear resistance
high fatigue resistance

- Outstanding protection against corrosion and wear
- Unique protection against chain joint stiffness
- Extremely eco-friendly

**RexHiPro**
good corrosion resistance
excellent loading capacity

- Outstanding corrosion resistance
- Long service life
- High loading capacity

**RexAthletic**
good loading capacity
extended lubrication intervals

- Durable and low-maintenance
- Longer servicing intervals
- High loading capacity
- Extreme wear resistance for double-length service life

**REXDL®**
a brand of REXNORD

- The optimum choice for light and medium duty
- Good cost-benefit ratio
- Good availability

Rexnord Kette GmbH · Industriestr. 1 · 57518 Betzdorf · Tel (49) 2741 284 0 · rexinfo@rexnord.com · www.rexnord-kette.de
Rexnord Corporate Headquarters · 4701 W. Greenfield Avenue · Milwaukee, WI 53214-5310 · Phone: (414) 643 3000

MODULE_04/GB/2014/03 // No liability accepted for misprints or errors!

REXNORD
The right chain!

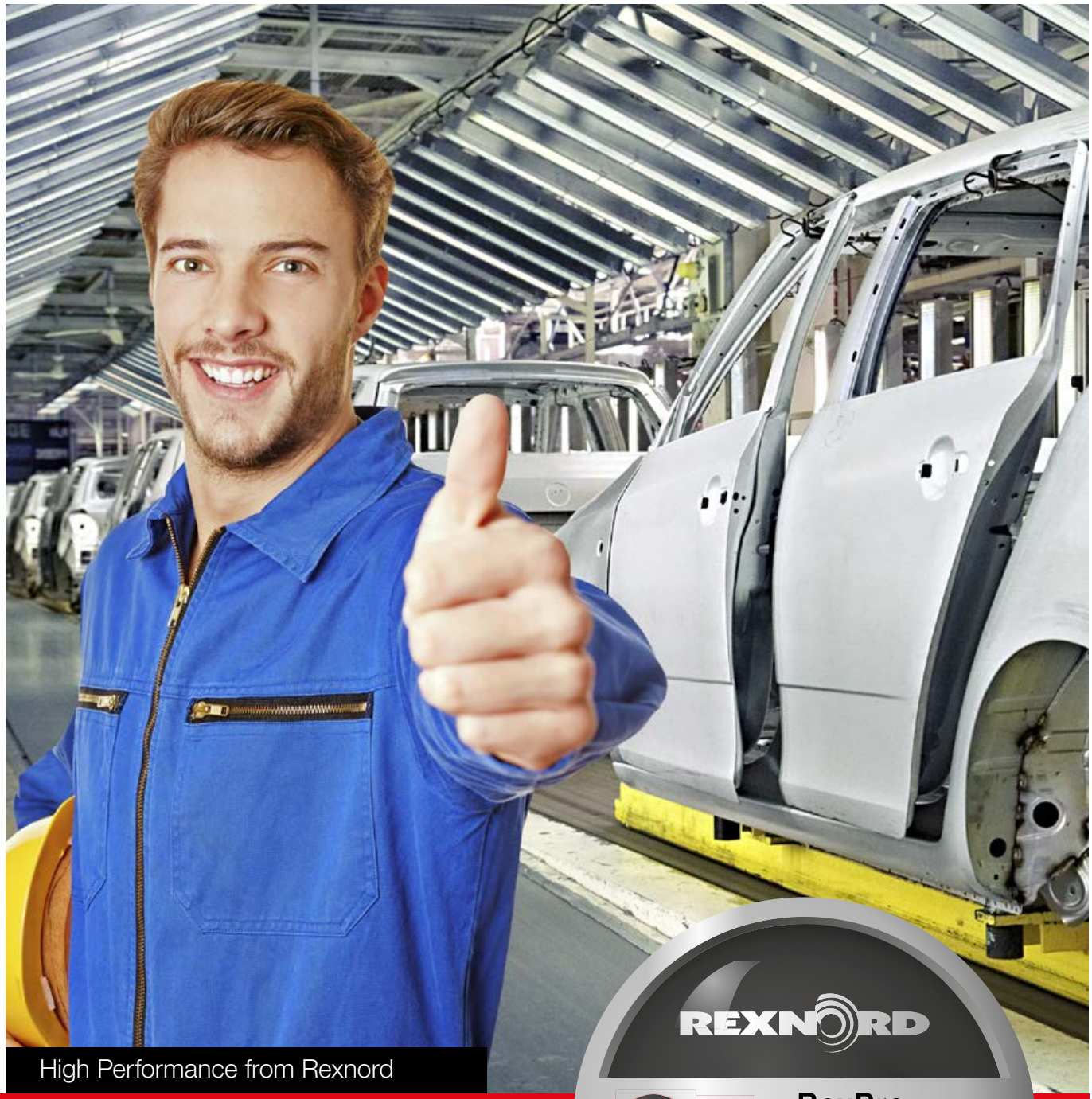

High Performance from Rexnord

# Roller chains with straight plates

REXNORD

**RexPro**

RexPro lubrication
improved wear resistance
high fatigue resistance

MODULE_04/GB/2014/03 // No liability accepted for misprints or errors!

REXNORD
The right chain!

**Outstanding corrosion protection, maximum operational safety**

# Roller chains with straight plates

High Performance from Rexnord.

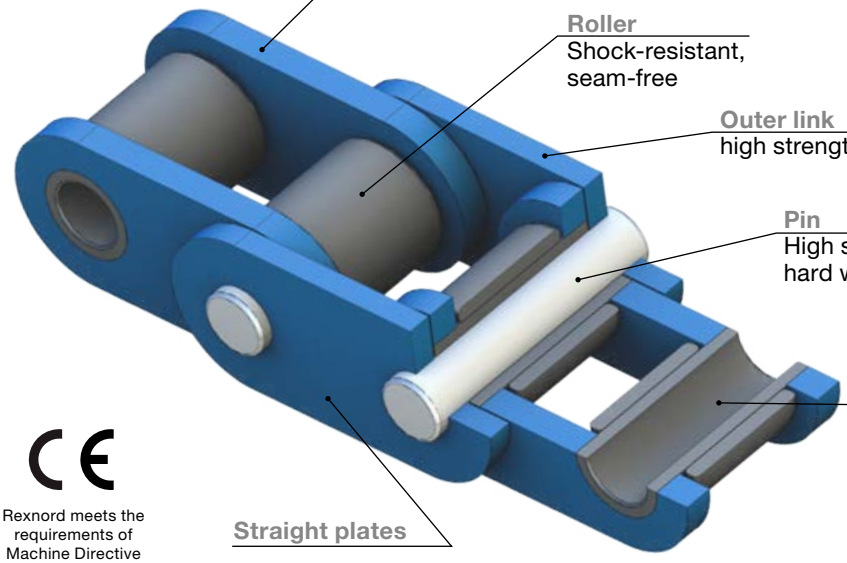


CE

Rexnord meets the requirements of Machine Directive 2006/42/EC

## APPLICATIONS

- Automobile and steel industry, beverage and bottling plants, logistics
- Food and beverage industry, packaging industry, material handling
- Pharmaceuticals, paper and wood processing, machinery and equipment

## CHARACTERISTICS

- High fatigue resistance
- Improved wear resistance
- Outstanding corrosion protection
- Very environmentally friendly
- Manufactured from high-performance materials
- Ball-drifted plate holes
- Seam-free rollers
- Shot-peened pins, plates, bushes and rollers
- Delivered adjusted and torsion-free on request
- NSF H2 certification, RoHS:2005 compliant

## ADVANTAGES

- Minimal bedding-in elongation
- Longer working life
- Very high impact strength
- Very robust under the toughest conditions
- Maximum operating reliability
- Improved cost-effectiveness

## LUBRICATION

- RexPro lubrication without heavy metals for improved protection
- Operating temperature: -30°C to +130°C (can be extended from -40°C to +250°C)
- Very good suface adhesion; remains drip resistant even at high temperatures
- No heavy metals, Teflon- and silicone-free



MODULE_04/GB/2014/03 // No liability accepted for misprints or errors!

# RexPro - High performance from Rexnord

### Excellent Corrosion Protection
- 8 - 10 times better than the best competitors
- More than 100 % better in the buckling test
- Highly versatile, also suitable for aggressive environments

### Improved Wear Resistance
- 8 - 12 % improvement in comparison to predecessor
- Great protection through RexPro lubrication
- Long working life
- High operating reliability

### High Fatigue Resistance
- Ball-drifted plate holes
- Shot-peened chain links, seam-free rollers
- High pre-loading

### Eco friendly
- Through RexPro lubrication
- No heavy metals; Teflon- and silicone-free
- Environmental management system conforms to DIN EN ISO 14001

# Salt spray test in accordance with DIN EN ISO 9227

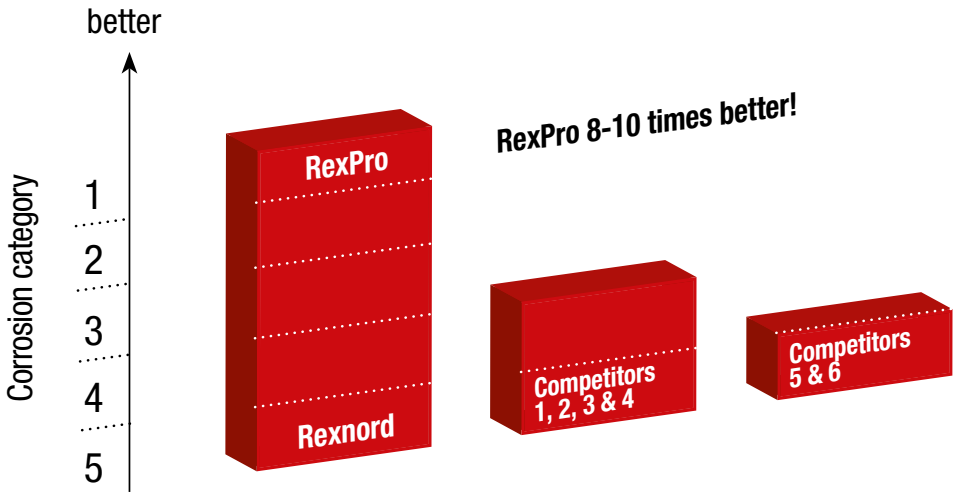

CE

Rexnord meets the requirements of Machine Directive 2006/42/EC

MODULE_04/GB/2014/03 // No liability accepted for misprints or errors!

# Roller chains with straight plates

High Performance from Rexnord.

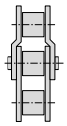

**Simplex roller chains**

CE

Rexnord meets the requirements of Machine Directive 2006/42/EC

## Excellent Corrosion Protection

- 8 - 10 times better than the best competitors
- More than 100 % better in the buckling test
- Highly versatile, also suitable for aggressive environments

## Improved Wear Resistance

- 8 - 12 % improvement in comparison to predecessor
- Great protection through RexPro lubrication
- Long working life
- High operating reliability

## High Fatigue Resistance

- Ball-drifted plate holes
- Shot-peened chain links, seam-free rollers
- High pre-loading

## Eco friendly

- Through RexPro lubrication
- No heavy metals; Teflon- and silicone-free
- Environmental management system conforms to DIN EN ISO 14001

## Simplex roller chains with straight plates, DIN ISO 606 (DIN 8187 / DIN 8188)

| Chain No. | Pitch p | | Width beetween inner plates | Roller diameter | Pin diameter | Width over inner link | Plate depth | Transverse pitch | Pin length | Connecting pin length | Bearing area | Required minimum tensile strength DIN/ISO | Average tensile strength | Weight | Components | | | | | | |
|---|---|---|---|---|---|---|---|---|---|---|---|---|---|---|---|---|---|---|---|---|---|
| | | | $b_1$ min | $d_1$ max | $d_2$ max | $b_2$ max | g | e | $a_1$ max | $a_3$ max | A | $F_U$ | $F_B$ | q | | | | | | | |
| | Inch | mm | mm | mm | mm | mm | mm | mm | mm | mm | cm² | N | N | kg/m | A | B | C | E | G | L | S |
| 06 B - 1 GL | 0.375 | 9.525 | 5.72 | 6.35 | 3.28 | 8.53 | 8.1 | – | 12.8 | 15.8 | 0.28 | 9 000 | | 0.5 | x | x | | x | | x | |
| 10 B - 1 GL | 0.625 | 15.875 | 9.65 | 10.16 | 5.08 | 13.28 | 13.9 | – | 18.9 | 22.0 | 0.67 | 22 400 | | 1.0 | x | x | | x | | x | |
| 12 B - 1 GL | 0.75 | 19.05 | 11.68 | 12.07 | 5.72 | 15.62 | 15.9 | – | 22.3 | 25.1 | 0.89 | 29 000 | | 1.3 | x | x | | x | | x | |
| 16 B - 1 GL | 1.00 | 25.4 | 17.02 | 15.88 | 8.28 | 25.40 | 20.3 | – | 35.4 | 42.4 | 2.10 | 60 000 | | 2.9 | x | x | | x | | x | |
| 20 B - 1 GL | 1.25 | 31.75 | 19.56 | 19.05 | 10.19 | 29.00 | 25.8 | – | 40.4 | 47.6 | 2.96 | 95 000 | | 4.0 | x | x | | | | | |
| 24 B - 1 GL | 1.50 | 38.1 | 25.40 | 25.40 | 14.63 | 37.90 | 33.0 | – | 53.8 | 60.6 | 5.54 | 160 000 | | 7.5 | x | x | | | | | |
| 32 B- 1 GL | 2.00 | 50.8 | 30.80 | 29.21 | 17.81 | 45.50 | 41.2 | – | 65.1 | 71.0 | 8.10 | 250 000 | | 10.4 | x | x | | | | | |
| 60 - 1 GL | 0.75 | 19.05 | 12.57 | 11.91 | 5.94 | 17.70 | 18.0 | – | 25.7 | 29.6 | 1.05 | 31 800 | | 1.6 | x | x | | | | x | |
| 80 - 1 GL | 1.00 | 25.4 | 15.75 | 15.88 | 7.92 | 22.50 | 24.0 | | 32.9 | 38.0 | 1.78 | 56 700 | | 3.0 | x | x | | | | x | |

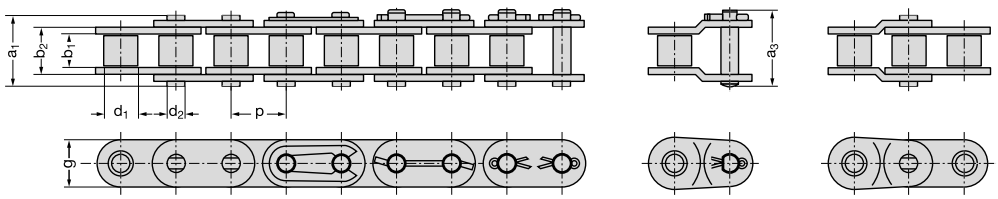


B inner link | A outer link | E connecting link with spring clip | G connecting link with single wire | S connecting link with cotter pin | L cranked link with cotter pin | C double cranked link

MODULE_04/GB/2014/03 // No liability accepted for misprints or errors!

# Roller chains with straight plates

High Performance from Rexnord.

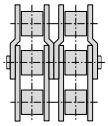

**Duplex roller chains**

## Excellent Corrosion Protection

- 8 - 10 times better than the best competitors
- More than 100 % better in the buckling test
- Highly versatile, also suitable for aggressive environments

## Improved Wear Resistance

- 8 - 12 % improvement in comparison to predecessor
- Great protection through RexPro lubrication
- Long working life
- High operating reliability

## High Fatigue Resistance

- Ball-drifted plate holes
- Shot-peened chain links, seam-free rollers
- High pre-loading

## Eco friendly

- Through RexPro lubrication
- No heavy metals; Teflon- and silicone-free
- Environmental management system conforms to DIN EN ISO 14001

CE

Rexnord meets the requirements of Machine Directive 2006/42/EC

## Duplex roller chains with straight plates, DIN ISO 606 (DIN 8187 / DIN 8188)

| Chain No. | Pitch p | | Width beetween inner plates $b_1$ min | Roller diameter $d_1$ max | Pin diameter $d_2$ max | Width over inner link $b_2$ max | Plate depth g | Transverse pitch | Pin length $a_1$ max | Connecting pin length $a_3$ max | Bearing area A | Required minimum tensile strength DIN/ISO $F_U$ | Average tensile strength $F_B$ | Weight q | Components | | | | | | |
|---|---|---|---|---|---|---|---|---|---|---|---|---|---|---|---|---|---|---|---|---|---|
| | Inch | mm | mm | mm | mm | mm | mm | | mm | mm | cm² | N | N | kg/m | A | B | C | E | G | L | S |
| 06 B - 2 GL | 0.375 | 9.525 | 5.72 | 6.35 | 3.28 | 8.53 | 8.1 | 10.24 | 23.1 | 26.0 | 0.56 | 16 000 | | 0.8 | x | x | | x | | x | |
| 10 B - 2 GL | 0.625 | 15.875 | 9.65 | 10.16 | 5.08 | 13.28 | 13.9 | 16.59 | 35.5 | 38.6 | 1.34 | 44 500 | | 1.9 | x | x | | x | | x | |
| 12 B - 2 GL | 0.75 | 19.05 | 11.68 | 12.07 | 5.72 | 15.62 | 15.9 | 19.46 | 41.7 | 44.4 | 1.79 | 57 800 | | 2.6 | x | x | | x | | x | |
| 16 B - 2 GL | 1.00 | 25.4 | 17.02 | 15.88 | 8.28 | 25.40 | 20.3 | 31.88 | 67.4 | 74.0 | 4.21 | 106 000 | | 5.8 | x | x | | x | | x | |

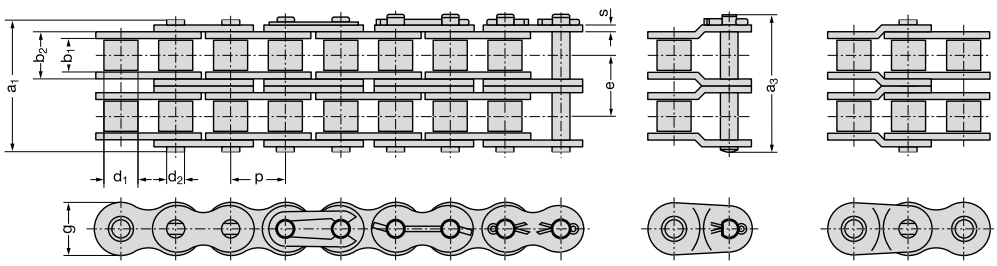


| B | A | E | G | S | L | C |
|---|---|---|---|---|---|---|
| inner link | outer link | connecting link with spring clip | connecting link with single wire | connecting link with cotter pin | cranked link with cotter pin | double cranked link |

MODULE_04/GB/2014/03 // No liability accepted for misprints or errors!

REXNORD
The right chain!

# Overview Rexnord roller chains

## Roller Chains

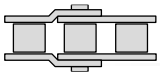

**RexPro**
RexPro lubrication
improved wear resistance
high fatigue resistance

- Outstanding protection against corrosion and wear
- Unique protection against chain joint stiffness
- Extremely eco-friendly

**RexAthletic**
good loading capacity
extended lubrication intervals

- Durable and low-maintenance
- Longer servicing intervals
- High loading capacity

**RexCarbon**
no lubrication
low noise

- Maintenance-free
- Low noise
- Eco-friendly

**RexPlus**
excellent corrosion resistance
high reliability

- Excellent resistance to rust and acids
- Highly reliable
- Fulfils hygiene requirements
- NSF H1 certification

**RexPlusCarbon**
no lubrication
excellent corrosion resistance

- Combination of RexPlus and RexCarbon
- Excellent resistance to rust and acids
- Maintenance-free
- NSF H1 certification

**RexHiPro**
good corrosion resistance
excellent loading capacity

- Outstanding corrosion resistance
- Long service life
- High loading capacity

**Link-Belt®**
a brand of REXNORD

- The optimum choice for light and medium duty
- Good cost-benefit ratio
- High availability

**RexProX**
RexPro lubrication
improved wear resistance
high fatigue resistance

- Extremely high loading capacity
- Long service life
- Outstanding protection against corrosion and wear

## Leaf Chains

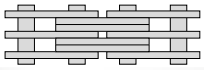

**RexPro**
RexPro lubrication
improved wear resistance
high fatigue resistance

- Outstanding protection against corrosion and wear
- Unique protection against chain joint stiffness
- Extremely eco-friendly

**RexHiPro**
good corrosion resistance
excellent loading capacity

- Outstanding corrosion resistance
- Long service life
- High loading capacity

**RexAthletic**
good loading capacity
extended lubrication intervals

- Durable and low-maintenance
- Longer servicing intervals
- High loading capacity
- Extreme wear resistance for double-length service life

**REXDL®**
a brand of REXNORD

- The optimum choice for light and medium duty
- Good cost-benefit ratio
- Good availability

Rexnord Kette GmbH · Industriestr. 1 · 57518 Betzdorf · Tel (49) 2741 284 0 · rexinfo@rexnord.com · www.rexnord-kette.de
Rexnord Corporate Headquarters · 4701 W. Greenfield Avenue · Milwaukee, WI 53214-5310 · Phone: (414) 643 3000

MODULE_04/GB/2014/03 // No liability accepted for misprints or errors!

REXNORD
The right chain!

High Performance from Rexnord

# Roller chains | Factory standard

MODULE_04/GB/2014/03 // No liability accepted for misprints or errors!

REXNORD
The right chain!

**Tailored solutions for specific applications**

meets customer needs

# Factory standard Roller chains

High Performance from Rexnord.

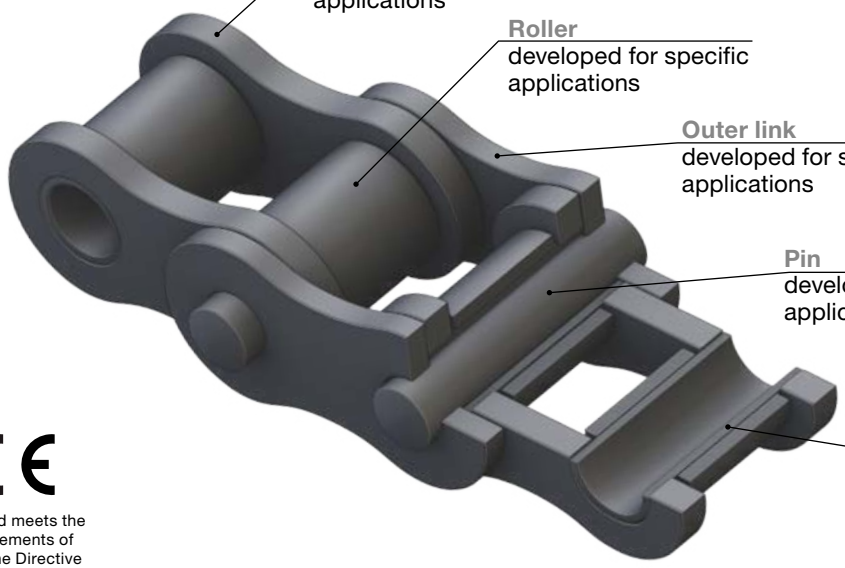


CE

Rexnord meets the requirements of Machine Directive 2006/42/EC

## APPLICATIONS

- Drilling rigs
- Road construction
- Agriculture and forestry

## CHARACTERISTICS

- Fulfils the stringent demands set by the excellent RexPro standards
- Enlarged bearing area
- Higher breaking strength
- Highest fatigue resistance
- Compatible with European type

## ADVANTAGES

- For high-performance power transmission
- Very high impact strength
- Very robust, even under the toughest conditions

## LUBRICATION

- RexPro lubrication without heavy metals for improved protection
- Operating temperature: -30°C to +130°C (can be extended from -40°C to +250°C)
- Very good suface adhesion; remains drip resistant even at high temperatures
- No heavy metals; Teflon- and silicone-free

MODULE_04/GB/2014/03 // No liability accepted for misprints or errors!

# RexPro - High performance from Rexnord

## Excellent Corrosion Protection

- 8 - 10 times better than the best competitors
- More than 100 % better in the buckling test
- Highly versatile, also suitable for aggressive environments

## Improved Wear Resistance

- 8 - 12 % improvement in comparison to predecessor
- Great protection through RexPro lubrication
- Long working life
- High operating reliability

## High Fatigue Resistance

- Ball-drifted plate holes
- Shot-peened chain links, seam-free rollers
- High pre-loading

## Eco friendly

- Through RexPro lubrication
- No heavy metals; Teflon- and silicone-free
- Environmental management system conforms to DIN EN ISO 14001

# Salt spray test in accordance with DIN EN ISO 9227

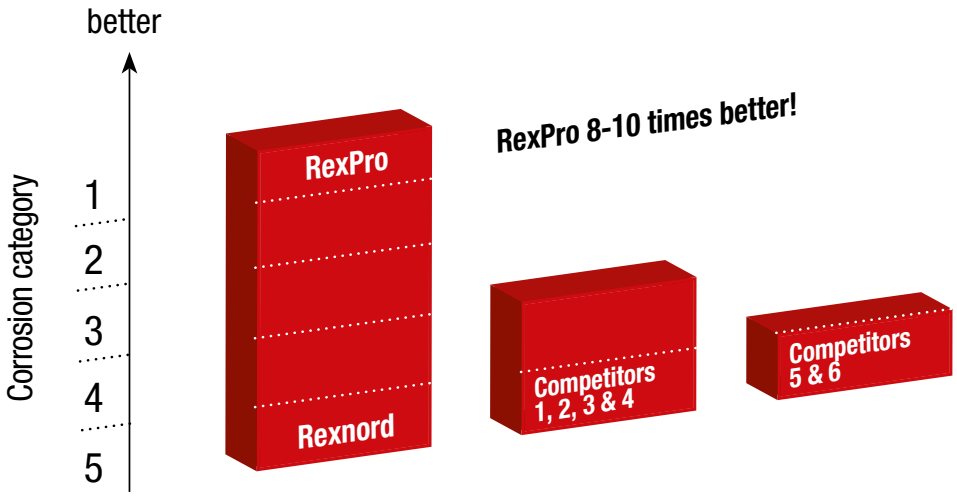

CE

Rexnord meets the requirements of Machine Directive 2006/42/EC

MODULE_04/GB/2014/03 // No liability accepted for misprints or errors!

REXNORD
The right chain!

# Factory standard Roller chains

Tailored solutions for specific applications.

CE

Rexnord meets the requirements of Machine Directive 2006/42/EC

## Applications & Characteristics

- For heavy-duty drives and lifting purposes
- High loading capacity

## Maintenance & Service life

- Very robust
- Long service life

## Eco friendly

- Through RexPro lubrication
- No heavy metals; Teflon- and silicone-free
- Environmental management system conforms to DIN EN ISO 14001

## Roller chains, Factory standard

| Chain No. | Pitch p | | Width beetween inner plates $b_1$ min | Roller diameter $d_1$ max | Pin diameter $d_2$ max | Width over inner link $b_2$ max | Plate depth g | Transverse pitch e | Pin length $a_1$ max | Locking pin length $a_3$ max | Bearing area A | Average tensile strength $F_B$ | Weight q | Components | | | | | |
|---|---|---|---|---|---|---|---|---|---|---|---|---|---|---|---|---|---|---|---|
| | Inch | mm | mm | mm | mm | mm | mm | mm | mm | mm | cm² | N | kg/m | A | B | C | E | L | S |
| Re 217 | 0.50 | 12.7 | 6.40 | 8.51 | 4.45 | 9.93 | 11.6 | – | 15.4 | 18.9 | 0.44 | 18 000 | 0.7 | x | x | x | x | x | |
| Re 317 | 0.625 | 15.875 | 6.48 | 10.16 | 5.08 | 10.08 | 14.7 | – | 16.0 | 20.0 | 0.51 | 23 600 | 0.8 | x | x | x | x | x | |
| Re 425 | 0.75 | 19.05 | 13.50 | 12.07 | 5.72 | 19.40 | 16.8 | – | 27.0 | 31.8 | 1.12 | 33 500 | 1.6 | x | x | x | x | x | x |
| Re 487 | 0.787 | 20 | 16.00 | 12.00 | 6.00 | 22.50 | 19.0 | – | 32.1 | 35.9 | 1.35 | 35 500 | 2.0 | x | x | x | x | x | x |
| He 488 | 0.787 | 20 | 16.00 | 12.00 | 8.00 | 22.50 | 19.0 | – | 32.5 | 37.3 | 1.80 | 35 500 | 2.0 | x | x | x | | | |
| Re 514 | 1.00 | 25.4 | 12.70 | 14.00 | 7.00 | 19.07 | 19.7 | – | 27.3 | 33.1 | 1.33 | 45 000 | 1.7 | x | x | x | x | x | x |
| Re 516 | 1.00 | 25.4 | 12.70 | 15.88 | 8.28 | 21.07 | 20.6 | – | 30.8 | 37.6 | 1.74 | 63 000 | 2.4 | x | x | x | x | x | x |
| Re 525 | 1.00 | 25.4 | 12.70 | 12.70 | 7.00 | 19.07 | 20.8 | – | 27.4 | 32.5 | 1.33 | 45 000 | 1.6 | x | x | x | x | x | x |
| Re 626 | 1.18 | 30 | 17.02 | 15.88 | 8.28 | 25.40 | 20.5 | – | 35.5 | 41.9 | 2.10 | 63 000 | 2.3 | x | x | x | | x | x |

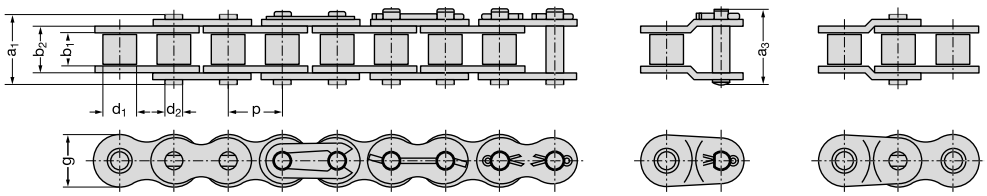


B inner link | A outer link | E connecting link with spring clip | G connecting link with single wire | S connecting link with cotter pin | L cranked link with cotter pin | C double cranked link

MODULE_04/GB/2014/03 // No liability accepted for misprints or errors!

REXNORD
The right chain!

REXNORD
The right chain!

# Overview Rexnord roller chains

## Roller Chains

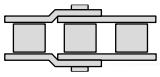

**RexPro**
RexPro lubrication
improved wear resistance
high fatigue resistance

- Outstanding protection against corrosion and wear
- Unique protection against chain joint stiffness
- Extremely eco-friendly

**RexAthletic**
good loading capacity
extended lubrication intervals

- Durable and low-maintenance
- Longer servicing intervals
- High loading capacity

**RexCarbon**
no lubrication
low noise

- Maintenance-free
- Low noise
- Eco-friendly

**RexPlus**
excellent corrosion resistance
high reliability

- Excellent resistance to rust and acids
- Highly reliable
- Fulfils hygiene requirements
- NSF H1 certification

**RexPlusCarbon**
no lubrication
excellent corrosion resistance

- Combination of RexPlus and RexCarbon
- Excellent resistance to rust and acids
- Maintenance-free
- NSF H1 certification

**RexHiPro**
good corrosion resistance
excellent loading capacity

- Outstanding corrosion resistance
- Long service life
- High loading capacity

**Link-Belt®**
a brand of REXNORD

- The optimum choice for light and medium duty
- Good cost-benefit ratio
- High availability

**RexProX**
RexPro lubrication
improved wear resistance
high fatigue resistance

- Extremely high loading capacity
- Long service life
- Outstanding protection against corrosion and wear

## Leaf Chains

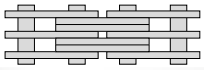

**RexPro**
RexPro lubrication
improved wear resistance
high fatigue resistance

- Outstanding protection against corrosion and wear
- Unique protection against chain joint stiffness
- Extremely eco-friendly

**RexHiPro**
good corrosion resistance
excellent loading capacity

- Outstanding corrosion resistance
- Long service life
- High loading capacity

**RexAthletic**
good loading capacity
extended lubrication intervals

- Durable and low-maintenance
- Longer servicing intervals
- High loading capacity
- Extreme wear resistance for double-length service life

**REXDL®**
a brand of REXNORD

- The optimum choice for light and medium duty
- Good cost-benefit ratio
- Good availability

Rexnord Kette GmbH · Industriestr. 1 · 57518 Betzdorf · Tel (49) 2741 284 0 · rexinfo@rexnord.com · www.rexnord-kette.de
Rexnord Corporate Headquarters · 4701 W. Greenfield Avenue · Milwaukee, WI 53214-5310 · Phone: (414) 643 3000

MODULE_04/GB/2014/03 // No liability accepted for misprints or errors!

REXNORD
The right chain!

High Performance from Rexnord

# Plate link chains

REXNORD

**RexPro**

RexPro lubrication
improved wear resistance
high fatigue resistance

MODULE_04/GB/2014/03 // No liability accepted for misprints or errors!

REXNORD
The right chain!

**Highly robust**

through reinforced link plates and pins

# Plate link chains

High Performance from Rexnord.

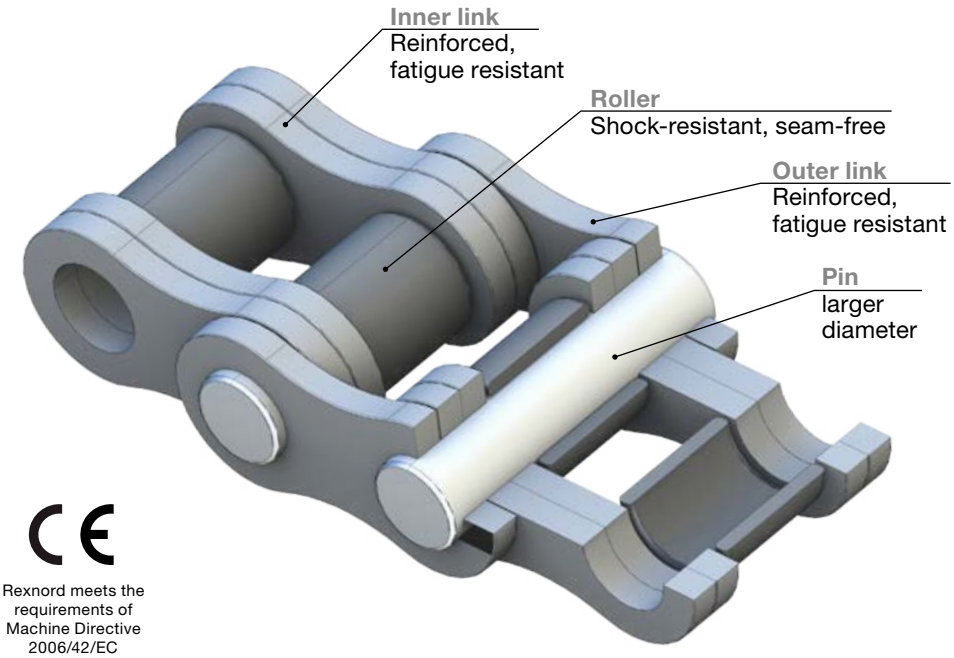


CE

Rexnord meets the requirements of Machine Directive 2006/42/EC

## APPLICATIONS

- Steelmaking, heavy mechanical engineering
- Special applications
- Container transport systems

## CHARACTERISTICS

- Fulfils the stringent demands set by the excellent RexPro standards
- Combines the advantages of roller chains and leaf chains
- Reinforced pins and higher breaking strength
- Double quantity of movable plate links

## ADVANTAGES

- Synchronization of lifting operations possible
- Power distribution possible via chain sprocket
- Higher operating reliability and longer service life

## LUBRICATION

- Easy relubrication
- Outstanding protection through RexPro lubrication without heavy metals
- Operating temperature: -30°C to +130°C (can be extended from -40°C to +250°C)
- Very good suface adhesion; remains drip resistant even at high temperatures
- No heavy metals; Teflon- and silicone-free

MODULE_04/GB/2014/03 // No liability accepted for misprints or errors!

# RexPro - High performance from Rexnord

### Excellent Corrosion Protection
- 8 - 10 times better than the best competitors
- More than 100 % better in the buckling test
- Highly versatile, also suitable for aggressive environments

### Improved Wear Resistance
- 8 - 12 % improvement in comparison to predecessor
- Great protection through RexPro lubrication
- Long working life
- High operating reliability

### High Fatigue Resistance
- Ball-drifted plate holes
- Shot-peened chain links, seam-free rollers
- High pre-loading

### Eco friendly
- Through RexPro lubrication
- No heavy metals; Teflon- and silicone-free
- Environmental management system conforms to DIN EN ISO 14001

# Salt spray test in accordance with DIN EN ISO 9227

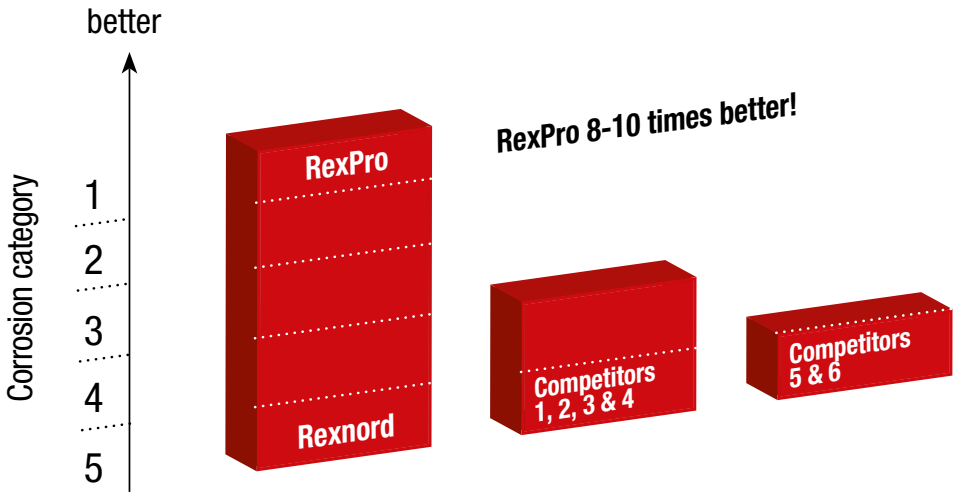

CE

Rexnord meets the requirements of Machine Directive 2006/42/EC

MODULE_04/GB/2014/03 // No liability accepted for misprints or errors!

# Plate link chains

High Performance from Rexnord.

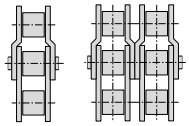

## Simplex & Duplex Plate link chains

Rexnord meets the requirements of Machine Directive 2006/42/EC

### Applications & Characteristics

- For heavy-duty drives and lifting purposes
- High loading capacity

### Maintenance & Service life

- Very robust
- Long service life

### Eco friendly

- Through RexPro lubrication
- No heavy metals; Teflon- and silicone-free
- Environmental management system conforms to DIN EN ISO 14001

## Simplex-Plate link chains

| Chain No. | Pitch p Inch | Pitch p mm | Width beetween inner plates $b_1$ min mm | Roller diameter $d_1$ max mm | Pin diameter $d_2$ max mm | Clear width outer link $b_3$ min mm | Plate link thickness $s_1$ | Plate link thickness $s_2$ | Plate depth g mm | Transverse pitch e mm | Pin length $a_1$ max mm | Bearing area A cm² | Average tensile strength $F_B$ N | Weight q kg/m | VGL-S |
|---|---|---|---|---|---|---|---|---|---|---|---|---|---|---|---|
| 50 - 1 SL/A | 2.00 | 50.8 | 31.55 | 28.58 | 20.35 | 57.5 | 6.3 | 6.3 | 47.8 | – | 75.5 | 5.1 | 270 000 | 14.9 | x |
| 64 - 1 S | 2.50 | 63.5 | 38.10 | 39.38 | 30.00 | 77.0 | 9.5 | 9.5 | 59.5 | – | 104.0 | 11.4 | 530 000 | 28.0 | x |
| 64 - 1 SH | 2.50 | 63.5 | 38.10 | 39.38 | 30.00 | 71.5 | 8.0 | 11.0 | 59.5 | – | 101.0 | 9.6 | 600 000 | 25.5 | x |
| 64 - 1 SHBK | 2.50 | 63.5 | 27.60 | 39.38 | 30.00 | 67.0 | 9.5 | 11.0 | 59.5 | – | 95.0 | 11.4 | 600 000 | 27.5 | x |

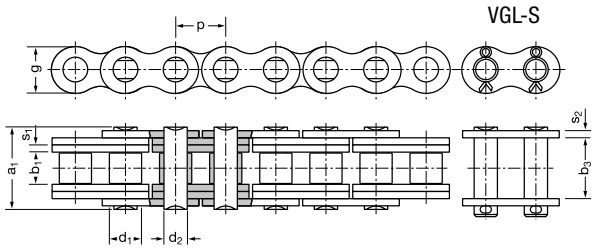


Plate link chain RLK 50-1 SL/A, Plate link chain 64-1 S / SH / SH BK

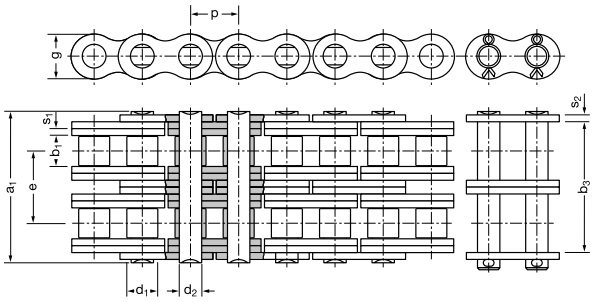


Plate link chain RLK 50-2 SL/A

## Duplex-Plate link chains

| Chain No. | Pitch p Inch | Pitch p mm | Width beetween inner plates $b_1$ min mm | Roller diameter $d_1$ max mm | Pin diameter $d_2$ max mm | Clear width outer link $b_3$ min mm | Plate link thickness $s_1$ | Plate link thickness $s_2$ | Plate depth g mm | Transverse pitch e mm | Pin length $a_1$ max mm | Bearing area A cm² | Average tensile strength $F_B$ N | Weight q kg/m | VGL-S |
|---|---|---|---|---|---|---|---|---|---|---|---|---|---|---|---|
| 50 - 2 SL/A | 2.00 | 50.8 | 31.55 | 28.58 | 20.35 | 128.0 | 6.3 | 6.3 | 47.8 | 70.5 | 146.0 | 10.2 | 540 000 | 29.4 | x |

MODULE_04/GB/2014/03 // No liability accepted for misprints or errors!

REXNORD
The right chain!

REXNORD
The right chain!

# Overview Rexnord roller chains

## Roller Chains

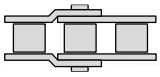

**RexPro**
RexPro lubrication
improved wear resistance
high fatigue resistance

- Outstanding protection against corrosion and wear
- Unique protection against chain joint stiffness
- Extremely eco-friendly

**RexAthletic**
good loading capacity
extended lubrication intervals

- Durable and low-maintenance
- Longer servicing intervals
- High loading capacity

**RexCarbon**
no lubrication
low noise

- Maintenance-free
- Low noise
- Eco-friendly

**RexPlus**
excellent corrosion resistance
high reliability

- Excellent resistance to rust and acids
- Highly reliable
- Fulfils hygiene requirements
- NSF H1 certification

**RexPlusCarbon**
no lubrication
excellent corrosion resistance

- Combination of RexPlus and RexCarbon
- Excellent resistance to rust and acids
- Maintenance-free
- NSF H1 certification

**RexHiPro**
good corrosion resistance
excellent loading capacity

- Outstanding corrosion resistance
- Long service life
- High loading capacity

**Link-Belt®**
a brand of REXNORD

- The optimum choice for light and medium duty
- Good cost-benefit ratio
- High availability

**RexProX**
RexPro lubrication
improved wear resistance
high fatigue resistance

- Extremely high loading capacity
- Long service life
- Outstanding protection against corrosion and wear

## Leaf Chains

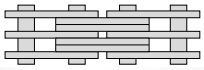

**RexPro**
RexPro lubrication
improved wear resistance
high fatigue resistance

- Outstanding protection against corrosion and wear
- Unique protection against chain joint stiffness
- Extremely eco-friendly

**RexHiPro**
good corrosion resistance
excellent loading capacity

- Outstanding corrosion resistance
- Long service life
- High loading capacity

**RexAthletic**
good loading capacity
extended lubrication intervals

- Durable and low-maintenance
- Longer servicing intervals
- High loading capacity
- Extreme wear resistance for double-length service life

**REXDL®**
a brand of REXNORD

- The optimum choice for light and medium duty
- Good cost-benefit ratio
- Good availability

Rexnord Kette GmbH · Industriestr. 1 · 57518 Betzdorf · Tel (49) 2741 284 0 · rexinfo@rexnord.com · www.rexnord-kette.de
Rexnord Corporate Headquarters · 4701 W. Greenfield Avenue · Milwaukee, WI 53214-5310 · Phone: (414) 643 3000

MODULE_04/GB/2014/03 // No liability accepted for misprints or errors!

REXNORD
The right chain!

High Performance from Rexnord

# Rotary chains

MODULE_04/GB/2014/03 // No liability accepted for misprints or errors!

REXNORD
The right chain!

**Highly robust and durable**

# Rotary chains

High Performance from Rexnord.

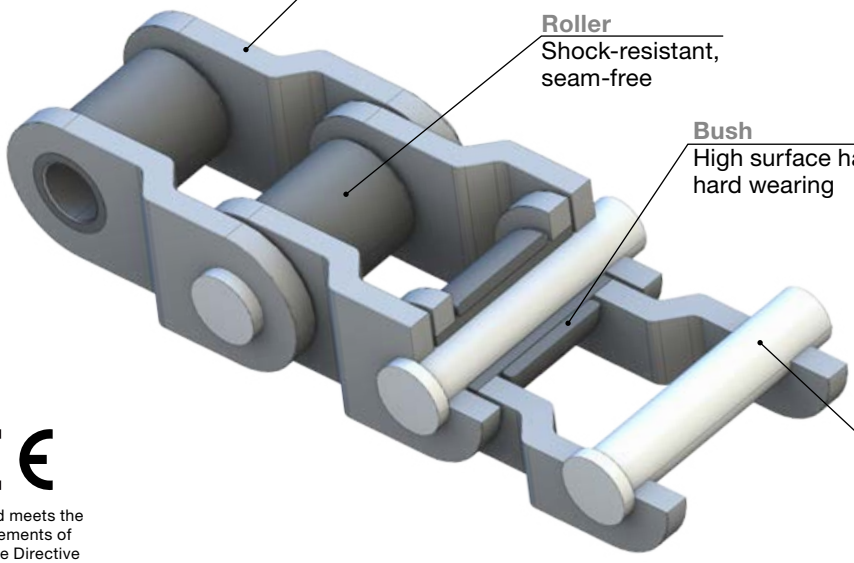


CE

Rexnord meets the requirements of Machine Directive 2006/42/EC

## APPLICATIONS

- Drum drives
- Looped drives
- Segmented drives

## CHARACTERISTICS

- Especially robust
- Pins are torsion-proof
- Induction-hardened pins for high wear resistance

## ADVANTAGES

- Dirt-proof and shockproof
- Easy to dismantle, any pin can be removed
- Low noise
- Efficient power transmission through optimized meshing conditions

MODULE_04/GB/2014/03 // No liability accepted for misprints or errors!

# RexPro - High performance from Rexnord

### Excellent Corrosion Protection
- 8 - 10 times better than the best competitors
- More than 100 % better in the buckling test
- Highly versatile, also suitable for aggressive environments

### Improved Wear Resistance
- 8 - 12 % improvement in comparison to predecessor
- Great protection through RexPro lubrication
- Long working life
- High operating reliability

### High Fatigue Resistance
- Ball-drifted plate holes
- Shot-peened chain links, seam-free rollers
- High pre-loading

### Eco friendly
- Through RexPro lubrication
- No heavy metals; Teflon- and silicone-free
- Environmental management system conforms to DIN EN ISO 14001

# Salt spray test in accordance with DIN EN ISO 9227

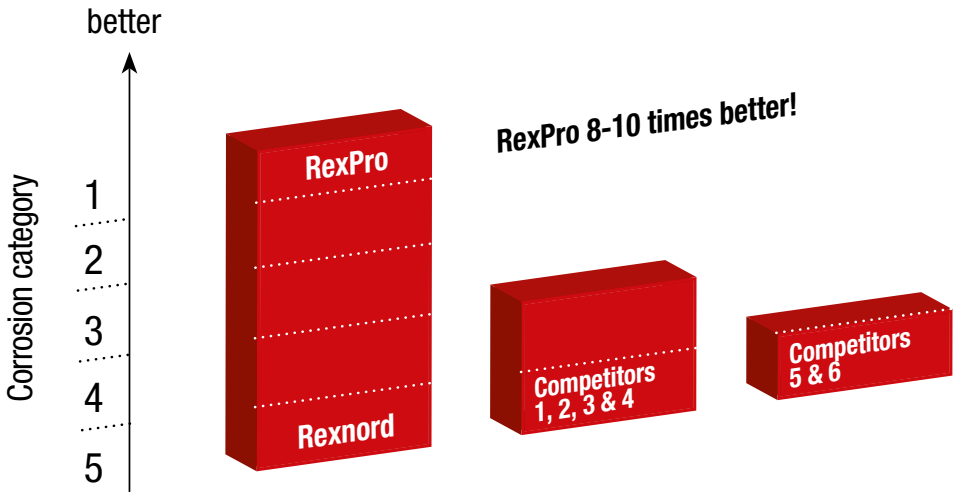

CE

Rexnord meets the requirements of Machine Directive 2006/42/EC

MODULE_04/GB/2014/03 // No liability accepted for misprints or errors!

# Rexnord segmented sprocket wheel system

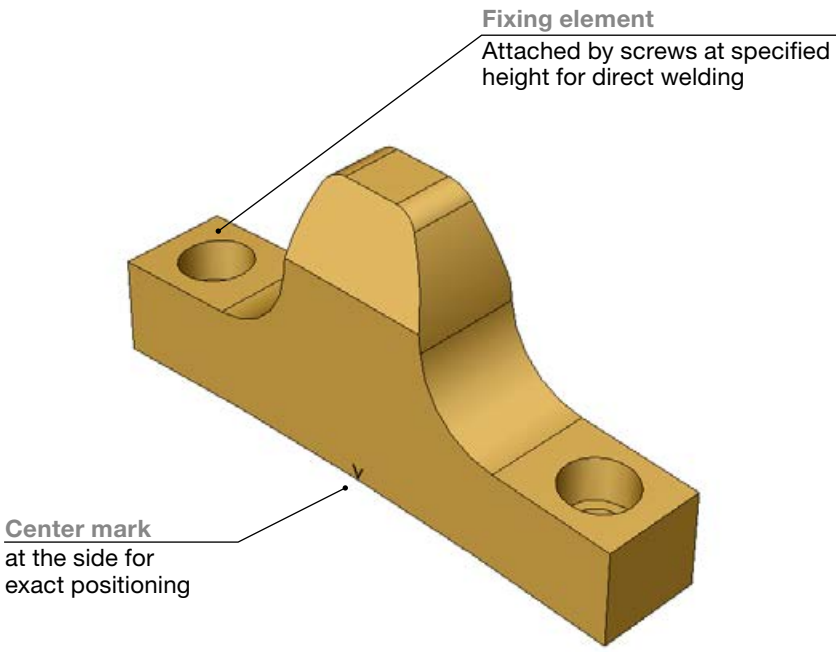


## APPLICATIONS

- Chains for drum drives
- Chains for looped drives
- Chains for segmented drives

## CHARACTERISTICS

- System consists of individual blocks of teeth
- Drum pitch circle and diameter determine height of fixing elements
- Tooth base form of tooth blocks without fixing elements are adjusted to drum radius
- Required tooth base height is determined by drum diameter, pitch and number of teeth
- Adjusted tooth blocks can be attached directly to the drum surface
- Recommended material for tooth blocks: ST 52-3
- Processed outer contour and contact surface
- Intermediate arc components produced by drum manufacturer
- Intermediate arc components with same height and width dimensions as tooth blocks
- Intermediate arc components are used to support the chain

## ADVANTAGES

- Cheaper than a large solid sprocket wheel
- Large or small tooth block clearances can be selected according to drive type
- Patented
- Tooth blocks produced in house
- Tooth blocks produeced depending on application
- Optimum precision
- Functional reliability

MODULE_04/GB/2014/03 // No liability accepted for misprints or errors!

# Rotary chains

High Performance from Rexnord.

## Applications & Characteristics

- For heavy-duty drives and lifting purposes
- High loading capacity

## Maintenance & Service life

- Very robust
- Long service life

## Eco friendly

- Through RexPro lubrication
- No heavy metals; Teflon- and silicone-free
- Environmental management system conforms to DIN EN ISO 14001

CE

Rexnord meets the requirements of Machine Directive 2006/42/EC

## Rotary chains

| Chain No. | Pitch p | | Width beetween inner plates | Roller diameter | Pin diameter | Clear width Outer link | Plate depth | Plate link thickness | Pins | Bearing area | Minimum breaking srength | Weight | Type |
|---|---|---|---|---|---|---|---|---|---|---|---|---|---|
| | | | $b_1$ min | $d_1$ max | $d_2$ max | $b_3$ min | g | s | | A | $F_U$ | q | |
| | Inch | mm | mm | mm | mm | mm | mm | | | cm² | N | kg/m | |
| Ro 20 | 2.00 | 50.8 | 30.6 | 28.58 | 14.27 | 71.5 | 48.0 | 6.35 | TH | 6.40 | 222 500 | 9.9 | A |
| Ro 20 H | 2.00 | 50.8 | 30.6 | 28.58 | 15.06 | | | | | | | | A |
| 1037 | 3.075 | 78.1 | 36.5 | 31.75 | 16.46 | 95.2 | 44.5 | 9.5 | SIH | 9.40 | 280 400 | 12.8 | A |
| Ro 3 | 3.075 | 78.1 | 36.9 | 31.75 | 15.875 | 88.2 | 41.5 | 8.0 | SIH | 8.50 | 271 500 | 11.0 | B |
| Ro 3 B | 3.067 | 77.9 | 38.5 | 41.28 | 19.05 | 99.3 | 57.5 | 9.5 | SIH | 11.2 | 400 500 | 18.0 | B |
| Ro 3.5 | 3.50 | 88.9 | 36.9 | 44.45 | 22.22 | 114.0 | 57.5 | 12.7 | SIH | 14.1 | 556 300 | 23.6 | B |
| Ro 4 | 4.063 | 103.2 | 48.0 | 44.45 | 22.22 | 125.1 | 54.0 | 12.7 | SIH | 16.6 | 476 200 | 19.4 | B |
| Ro 4 B | 4.073 | 103.5 | 47.6 | 45.24 | 23.81 | 132.3 | 60.5 | 14.3 | SIH | 18.5 | 650 000 | 27.9 | B |
| Ro 4.5 | 4.50 | 114.3 | 50.8 | 57.15 | 27.78 | 136.6 | 76.5 | 14.3 | CIH | 22.5 | 894 500 | 32.9 | B |
| Ro 5 B | 5.00 | 127.0 | 68.3 | 63.50 | 31.75 | 156.9 | 89.0 | 15.9 | SIH | 32.2 | 116 1500 | 52.5 | B |
| Ro 6 | 6.00 | 152.4 | 74.6 | 76.20 | 38.10 | 182.3 | 102.0 | 19.0 | CIH | 43.5 | 164 6500 | 67.1 | B |

*FB - breaking force • TH - hardened and tempered • SIH - partially induction hardened • CIH - induction-hardened*

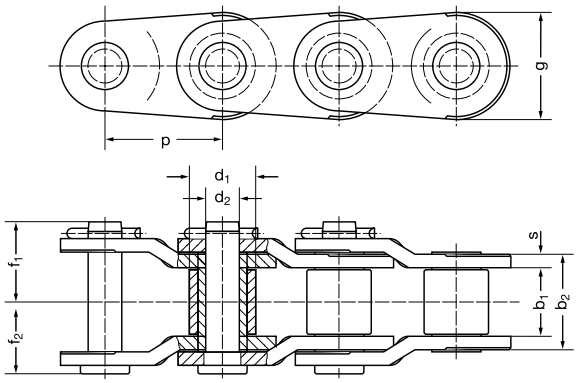


Type A

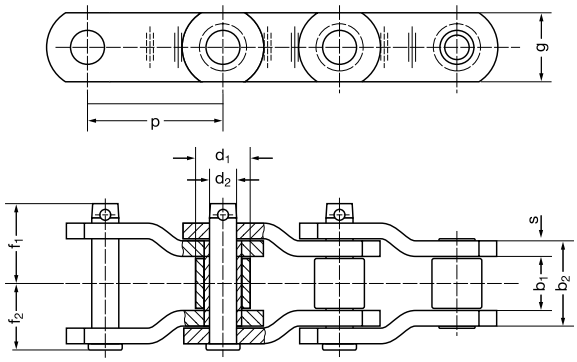


Type B

MODULE_04/GB/2014/03 // No liability accepted for misprints or errors!

## Determination of drive type and dimensions

Please enter your drive layout in the sketch version A, B, C or D as appropriate. However, if your planned drive solution is different from the versions illustrated, please send us a sketch with details of your proposed drive configuration. Our experienced drive engineers will be pleased to help if you have any technical questions or drive problems requiring solution. Take advantage of our wide experience in the field of drive engineering to ensure that you find the optimum drive configuration for your requirements.

A

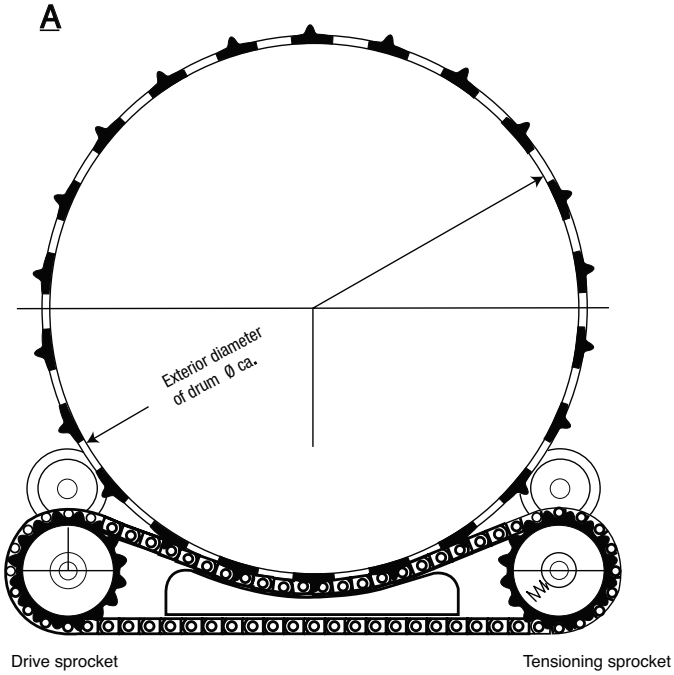


B

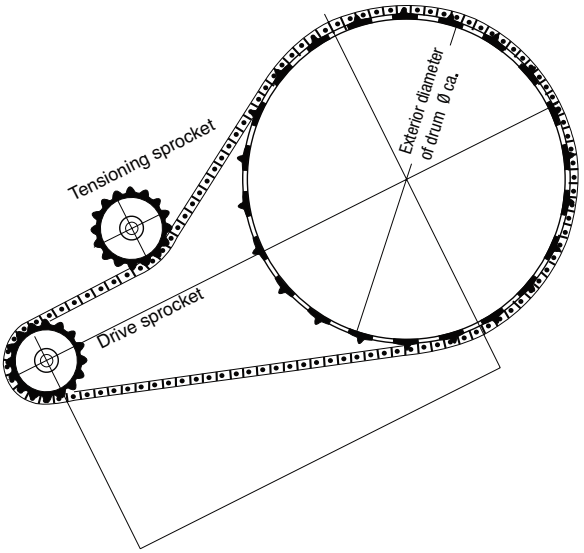


C

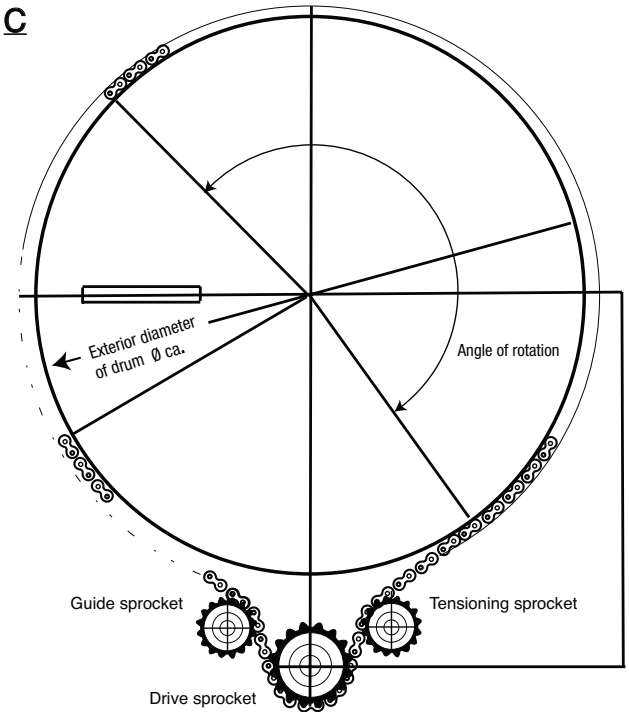


D

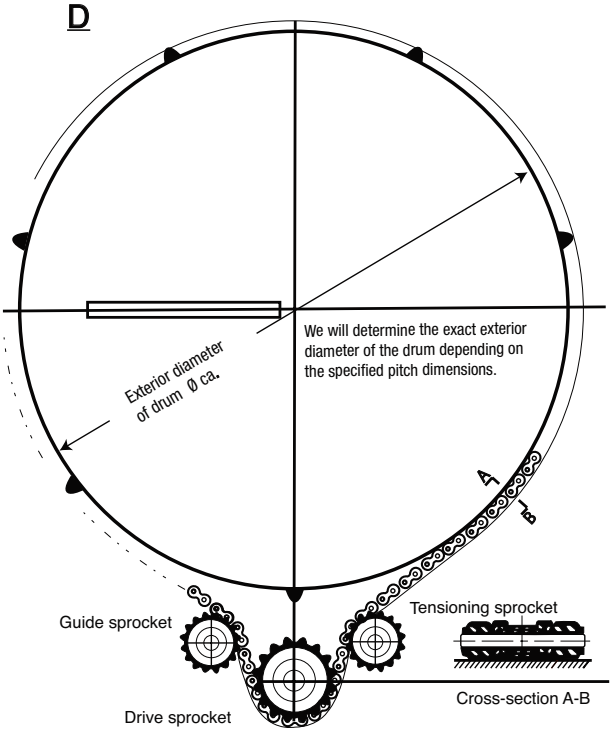


MODULE_04/GB/2014/03 // No liability accepted for misprints or errors!

## Sprockets

| Sprockets for rotary chains and roller chains with one-sided hub | Number of teeth | Pitch circle ø | Tooth width | Outside ø | Hub ø | Pre-bore ø | Bore size max | Total length | Weight approx. | Order No. |
|---|---|---|---|---|---|---|---|---|---|---|
| | Z | $d_0$ | $B_1$ | $d_K$ | $d_0$ | $d_2$ | $d_2$ | L | kg | |
| Ro 20 / Ro 20 H Pitch 50.8 mm | 17 | 276.5 | 28 | 294 | 130 | 50 | 70 | 85 | 17 | 021-200-17 |
| | 19 | 308.7 | 28 | 327 | 130 | 50 | 70 | 85 | 20 | 021-200-19 |
| | 21 | 340.9 | 28 | 359 | 130 | 50 | 70 | 85 | 24 | 021-200-21 |
| | 23 | 373.1 | 28 | 392 | 140 | 50 | 75 | 90 | 29 | 021-200-23 |
| | 25 | 405.3 | 28 | 424 | 140 | 50 | 75 | 90 | 33 | 021-200-25 |
| Ro 3b Pitch 77.9 mm | 17 | 423.3 | 34 | 469 | 200 | 60 | 110 | 130 | 52 | 021-302-17 |
| | 19 | 473.3 | 34 | 520 | 200 | 60 | 110 | 130 | 61 | 021-302-19 |
| | 21 | 522.7 | 34 | 571 | 200 | 60 | 110 | 130 | 71 | 021-302-21 |
| | 23 | 572.2 | 34 | 622 | 200 | 60 | 110 | 130 | 83 | 021-302-23 |
| | 25 | 621.6 | 34 | 673 | 200 | 60 | 110 | 130 | 95 | 021-302-25 |
| Ro 3 / Ro 3c Pitch 78.1 mm | 17 | 425.0 | 34 | 469 | 160 | 60 | 90 | 110 | 44 | 021-300-17 |
| | 19 | 474.5 | 34 | 520 | 160 | 60 | 90 | 110 | 54 | 021-300-19 |
| | 21 | 524.1 | 34 | 571 | 170 | 60 | 95 | 110 | 65 | 021-300-21 |
| | 23 | 573.6 | 34 | 622 | 170 | 60 | 95 | 110 | 79 | 021-300-23 |
| | 25 | 623.2 | 34 | 673 | 200 | 60 | 110 | 130 | 95 | 021-300-25 |
| Ro 4 Pitch 103.2 mm | 17 | 561.6 | 44 | 616 | 235 | 70 | 130 | 155 | 107 | 021-400-17 |
| | 19 | 627.0 | 44 | 684 | 250 | 70 | 140 | 170 | 135 | 021-400-19 |
| | 21 | 692.5 | 44 | 751 | 250 | 70 | 140 | 170 | 158 | 021-400-21 |
| | 23 | 758.0 | 44 | 818 | 250 | 70 | 140 | 170 | 184 | 021-400-23 |
| | 25 | 823.4 | 44 | 884 | 270 | 70 | 150 | 180 | 220 | 021-400-25 |
| Ro 4 ½ Pitch 114.3 mm | 17 | 622.0 | 47 | 685 | 270 | 80 | 150 | 180 | 147 | 021-450-17 |
| | 19 | 694.4 | 47 | 758 | 270 | 80 | 150 | 180 | 175 | 021-450-19 |
| | 21 | 766.9 | 47 | 830 | 290 | 80 | 160 | 190 | 215 | 021-450-21 |
| | 23 | 839.5 | 47 | 905 | 290 | 80 | 160 | 190 | 249 | 021-450-23 |
| | 25 | 912.0 | 47 | 977 | 290 | 80 | 160 | 190 | 285 | 021-450-25 |
| Ro 5 b Pitch 127.0 mm | 17 | 691.1 | 63 | 760 | 310 | 80 | 170 | 200 | 231 | 021-502-17 |
| | 19 | 771.7 | 63 | 840 | 320 | 80 | 180 | 210 | 282 | 021-502-19 |
| | 21 | 852.2 | 63 | 920 | 320 | 80 | 180 | 210 | 333 | 021-502-21 |
| | 23 | 932.8 | 63 | 1000 | 320 | 80 | 180 | 210 | 389 | 021-502-23 |
| | 25 | 1013.8 | 63 | 1080 | 340 | 80 | 190 | 225 | 464 | 021-502-25 |
| Ro 6 Pitch 152.4 mm | 17 | 829.4 | 69 | 910 | 360 | 90 | 200 | 240 | 370 | 021-600-17 |
| | 19 | 926.0 | 69 | 1005 | 360 | 90 | 200 | 240 | 442 | 021-600-19 |
| | 21 | 1022.6 | 69 | 1100 | 360 | 90 | 220 | 240 | 510 | 021-600-21 |
| | 23 | 1119.4 | 69 | 1200 | 360 | 90 | 220 | 240 | 598 | 021-600-23 |
| | 25 | 1216.0 | 69 | 1297 | 360 | 90 | 220 | 240 | 694 | 021-600-25 |
| 48 B Pitch 76.2 mm | 17 | 414.7 | 41 | 446 | 235 | 70 | 130 | 155 | 85 | 021-076-17 |
| | 19 | 463.0 | 41 | 494 | 250 | 70 | 140 | 170 | 101 | 021-076-19 |
| | 21 | 511.3 | 41 | 543 | 250 | 70 | 140 | 170 | 111 | 021-076-21 |
| | 23 | 559.6 | 41 | 591 | 250 | 70 | 140 | 170 | 122 | 021-076-23 |
| | 25 | 608.0 | 41 | 644 | 270 | 70 | 150 | 180 | 148 | 021-076-25 |
| 56 B Pitch 88.9 mm | 17 | 483.8 | 50.8 | 519 | 270 | 80 | 150 | 180 | 128 | 021-088-17 |
| | 19 | 540.2 | 50.8 | 575 | 270 | 80 | 150 | 180 | 148 | 021-088-19 |
| | 21 | 596.5 | 50.8 | 632 | 290 | 80 | 150 | 190 | 179 | 021-088-21 |
| | 23 | 652.9 | 50.8 | 688 | 290 | 80 | 150 | 190 | 198 | 021-088-23 |
| | 25 | 709.3 | 50.8 | 750 | 290 | 80 | 150 | 190 | 228 | 021-088-25 |

Sprockets are suppied with one-sided hub as standard. Symmetrical and asymmetrical versions available on request. Minimum strength of steel sprockets is 590 N/mm2 .
Tooth hardening on request.

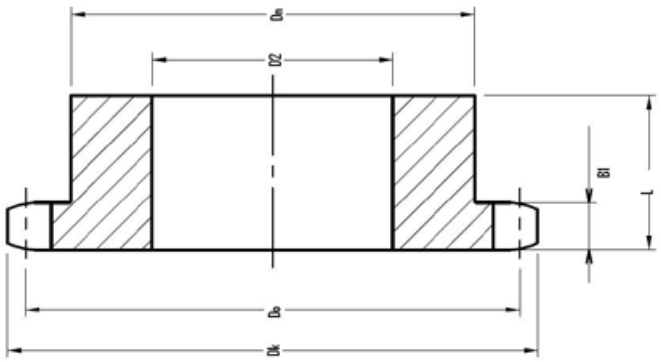


MODULE_04/GB/2014/03 // No liability accepted for misprints or errors!

REXNORD
The right chain!

# Overview Rexnord roller chains

## Roller Chains

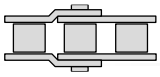

**RexPro**
RexPro lubrication
improved wear resistance
high fatigue resistance

- Outstanding protection against corrosion and wear
- Unique protection against chain joint stiffness
- Extremely eco-friendly

**RexAthletic**
good loading capacity
extended lubrication intervals

- Durable and low-maintenance
- Longer servicing intervals
- High loading capacity

**RexCarbon**
no lubrication
low noise

- Maintenance-free
- Low noise
- Eco-friendly

**RexPlus**
excellent corrosion resistance
high reliability

- Excellent resistance to rust and acids
- Highly reliable
- Fulfils hygiene requirements
- NSF H1 certification

**RexPlusCarbon**
no lubrication
excellent corrosion resistance

- Combination of RexPlus and RexCarbon
- Excellent resistance to rust and acids
- Maintenance-free
- NSF H1 certification

**RexHiPro**
good corrosion resistance
excellent loading capacity

- Outstanding corrosion resistance
- Long service life
- High loading capacity

**Link-Belt®**
a brand of REXNORD

- The optimum choice for light and medium duty
- Good cost-benefit ratio
- High availability

**RexProX**
RexPro lubrication
improved wear resistance
high fatigue resistance

- Extremely high loading capacity
- Long service life
- Outstanding protection against corrosion and wear

## Leaf Chains

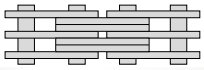

**RexPro**
RexPro lubrication
improved wear resistance
high fatigue resistance

- Outstanding protection against corrosion and wear
- Unique protection against chain joint stiffness
- Extremely eco-friendly

**RexHiPro**
good corrosion resistance
excellent loading capacity

- Outstanding corrosion resistance
- Long service life
- High loading capacity

**RexAthletic**
good loading capacity
extended lubrication intervals

- Durable and low-maintenance
- Longer servicing intervals
- High loading capacity
- Extreme wear resistance for double-length service life

**REXDL®**
a brand of REXNORD

- The optimum choice for light and medium duty
- Good cost-benefit ratio
- Good availability

Rexnord Kette GmbH · Industriestr. 1 · 57518 Betzdorf · Tel (49) 2741 284 0 · rexinfo@rexnord.com · www.rexnord-kette.de
Rexnord Corporate Headquarters · 4701 W. Greenfield Avenue · Milwaukee, WI 53214-5310 · Phone: (414) 643 3000

MODULE_04/GB/2014/03 // No liability accepted for misprints or errors!

REXNORD
The right chain!

High Performance from Rexnord

# Side bow roller chains

MODULE_04/GB/2014/03 // No liability accepted for misprints or errors!

REXNORD
The right chain!

The sideflexing chain

# Side bow roller chains

High Performance from Rexnord.

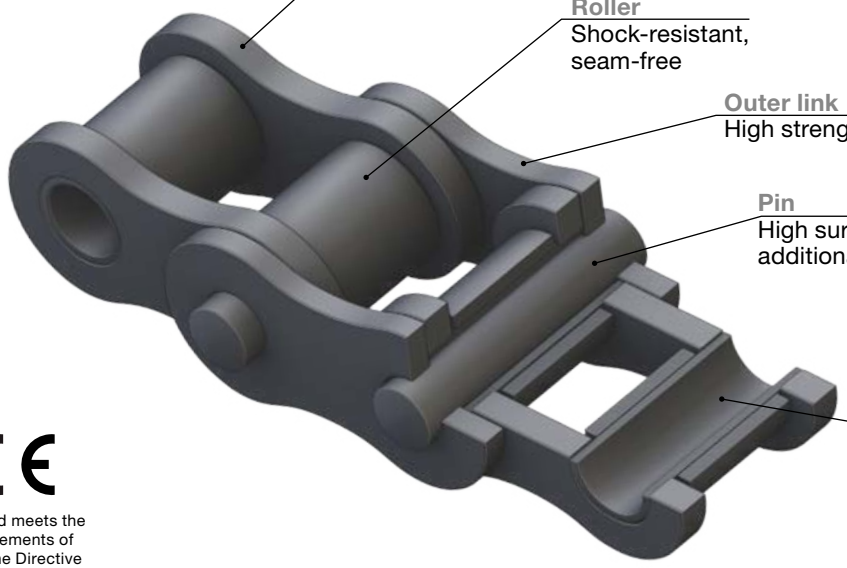


CE

Rexnord meets the requirements of Machine Directive 2006/42/EC

## APPLICATIONS

- Automotive industry, bottling and beverage plants, textile industry, agricultural machinery
- Food and confectionery industry, packing industry, conveyor engineering
- Pharmaceutical industry, paper and wood processing, machine and plant manufacturers

## CHARACTERISTICS

- High fatigue resistance
- Improved wear resistance
- Outstanding corrosion protection
- Very environmentally friendly
- Manufactured from high-performance materials
- Ball-drifted plate holes
- Seam-free rollers
- Shot-peened pins, plates, bushes and rollers
- Delivered adjusted and torsion-free on request
- NSF H2 certification, RoHS:2005 compliant

## ADVANTAGES

- Minimal bedding-in elongation
- Longer working life
- Very high impact strength
- Very robust under the toughest conditions
- Maximum operating reliability
- Improved cost-effectiveness

## LUBRICATION

- RexPro lubrication without heavy metals for improved protection
- Operating temperature: -30°C to +130°C (can be extended from -40°C to +250°C)
- Very good suface adhesion; remains drip resistant even at high temperatures
- No heavy metals, Teflon- and silicone-free

MODULE_04/GB/2014/03 // No liability accepted for misprints or errors!

# RexPro - High performance from Rexnord

## Excellent Corrosion Protection

- 8 - 10 times better than the best competitors
- More than 100 % better in the buckling test
- Highly versatile, also suitable for aggressive environments

## Improved Wear Resistance

- 8 - 12 % improvement in comparison to predecessor
- Great protection through RexPro lubrication
- Long working life
- High operating reliability

## High Fatigue Resistance

- Ball-drifted plate holes
- Shot-peened chain links, seam-free rollers
- High pre-loading

## Eco friendly

- Through RexPro lubrication
- No heavy metals; Teflon- and silicone-free
- Environmental management system conforms to DIN EN ISO 14001

# Salt spray test in accordance with DIN EN ISO 9227

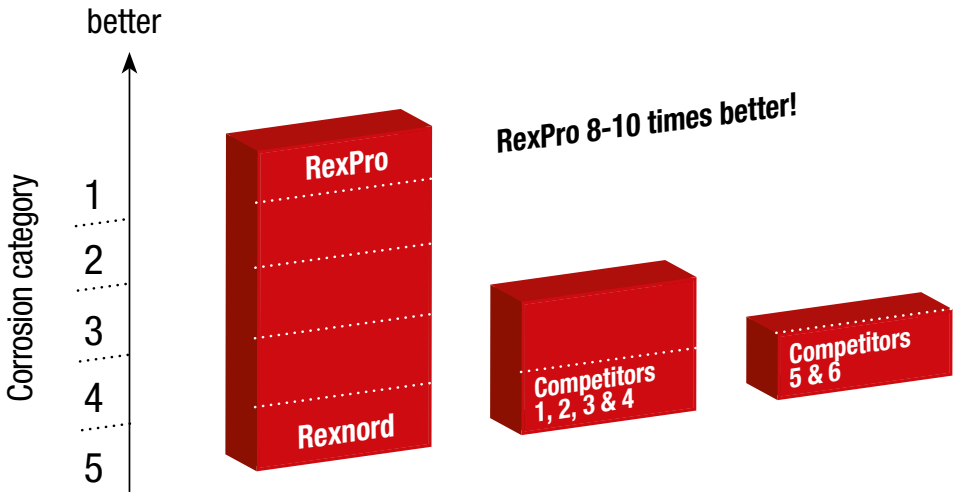

CE

Rexnord meets the requirements of Machine Directive 2006/42/EC

MODULE_04/GB/2014/03 // No liability accepted for misprints or errors!

REXNORD
The right chain!

# Side bow roller chains

High Performance from Rexnord.

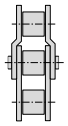

**Simplex roller chains**

CE

Rexnord meets the requirements of Machine Directive 2006/42/EC

## Excellent Corrosion Protection

- 8 - 10 times better than the best competitors
- More than 100 % better in the buckling test
- Highly versatile, also suitable for aggressive environments

## Improved Wear Resistance

- 8 - 12 % improvement in comparison to predecessor
- Great protection through RexPro lubrication
- Long working life
- High operating reliability

## High Fatigue Resistance

- Ball-drifted plate holes
- Shot-peened chain links, seam-free rollers
- High pre-loading

## Eco friendly

- Through RexPro lubrication
- No heavy metals; Teflon- and silicone-free
- Environmental management system conforms to DIN EN ISO 14001

## Side bow roller chains, Principal dimensions by European and American type (DIN 8187 / DIN 8188)

| Chain No. | Pitch p | | Width beetween inner plates $b_1$ min | Roller diameter $d_1$ max | Pin diameter $d_2$ max | Width over inner link $b_2$ max | Plate depth g | Pin length $a_1$ max | Connecting pin length $a_3$ max | Radius R | Stipulated min breaking load according to DIN/ISO $F_U$ | Weight q | Components | | | |
|---|---|---|---|---|---|---|---|---|---|---|---|---|---|---|---|---|
| | Inch | mm | mm | mm | mm | mm | mm | mm | mm | min | N | kg/m | A | B | C | E |
| 08 B - 1 SB | 0.50 | 12.7 | 7.75 | 8.51 | 4.45 | 11.30 | 11.8 | 17.1 | 18.3 | 315 | 11 200 | 0.7 | | | x | x |
| 10 B - 1 SB | 0.625 | 15.875 | 9.65 | 10.16 | 5.08 | 13.28 | 14.7 | 19.4 | 20.6 | 400 | 15 000 | 0.9 | | | x | x |
| 12 B - 1 SB | 0.75 | 19.05 | 11.68 | 12.07 | 5.72 | 15.61 | 15.9 | 22.5 | 23.7 | 500 | 20 000 | 1.2 | | | x | x |
| 63 | 0.75 | 19.05 | 12.80 | 11.91 | 5.08 | 17.60 | 16.8 | 29.1 | - | 356 | 26 000 | 1.4 | | | | |

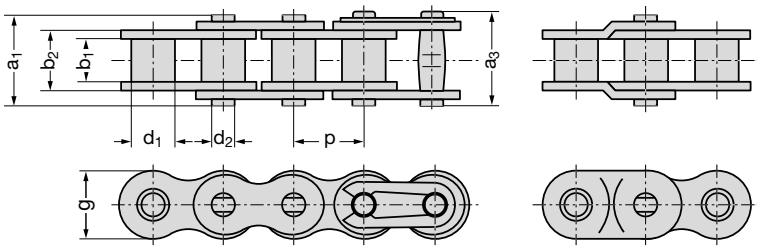


B inner link | A outer link | E connecting link with spring clip | C double cranked link

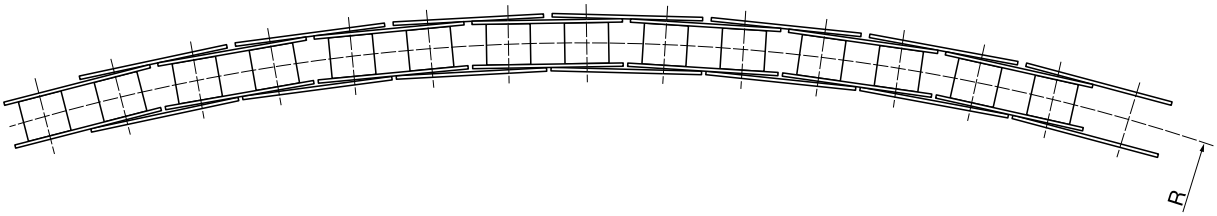


MODULE_04/GB/2014/03 // No liability accepted for misprints or errors!

REXNORD
The right chain!

REXNORD
The right chain!

# Overview Rexnord roller chains

## Roller Chains

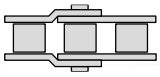

**RexPro**
RexPro lubrication
improved wear resistance
high fatigue resistance

- Outstanding protection against corrosion and wear
- Unique protection against chain joint stiffness
- Extremely eco-friendly

**RexAthletic**
good loading capacity
extended lubrication intervals

- Durable and low-maintenance
- Longer servicing intervals
- High loading capacity

**RexCarbon**
no lubrication
low noise

- Maintenance-free
- Low noise
- Eco-friendly

**RexPlus**
excellent corrosion resistance
high reliability

- Excellent resistance to rust and acids
- Highly reliable
- Fulfils hygiene requirements
- NSF H1 certification

**RexPlusCarbon**
no lubrication
excellent corrosion resistance

- Combination of RexPlus and RexCarbon
- Excellent resistance to rust and acids
- Maintenance-free
- NSF H1 certification

**RexHiPro**
good corrosion resistance
excellent loading capacity

- Outstanding corrosion resistance
- Long service life
- High loading capacity

**Link-Belt®**
a brand of REXNORD

- The optimum choice for light and medium duty
- Good cost-benefit ratio
- High availability

**RexProX**
RexPro lubrication
improved wear resistance
high fatigue resistance

- Extremely high loading capacity
- Long service life
- Outstanding protection against corrosion and wear

## Leaf Chains

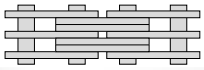

**RexPro**
RexPro lubrication
improved wear resistance
high fatigue resistance

- Outstanding protection against corrosion and wear
- Unique protection against chain joint stiffness
- Extremely eco-friendly

**RexHiPro**
good corrosion resistance
excellent loading capacity

- Outstanding corrosion resistance
- Long service life
- High loading capacity

**RexAthletic**
good loading capacity
extended lubrication intervals

- Durable and low-maintenance
- Longer servicing intervals
- High loading capacity
- Extreme wear resistance for double-length service life

**REXDL®**
a brand of REXNORD

- The optimum choice for light and medium duty
- Good cost-benefit ratio
- Good availability

Rexnord Kette GmbH · Industriestr. 1 · 57518 Betzdorf · Tel (49) 2741 284 0 · rexinfo@rexnord.com · www.rexnord-kette.de
Rexnord Corporate Headquarters · 4701 W. Greenfield Avenue · Milwaukee, WI 53214-5310 · Phone: (414) 643 3000

MODULE_04/GB/2014/03 // No liability accepted for misprints or errors!

REXNORD
The right chain!

High Performance from Rexnord

# Marine diesel version

REXNORD

**RexPro**

RexPro lubrication
improved wear resistance
high fatigue resistance

MODULE_04/GB/2014/03 // No liability accepted for misprints or errors!

REXNORD
The right chain!

**Maximum operating reliability**

# Marine diesel version

High Performance from Rexnord.

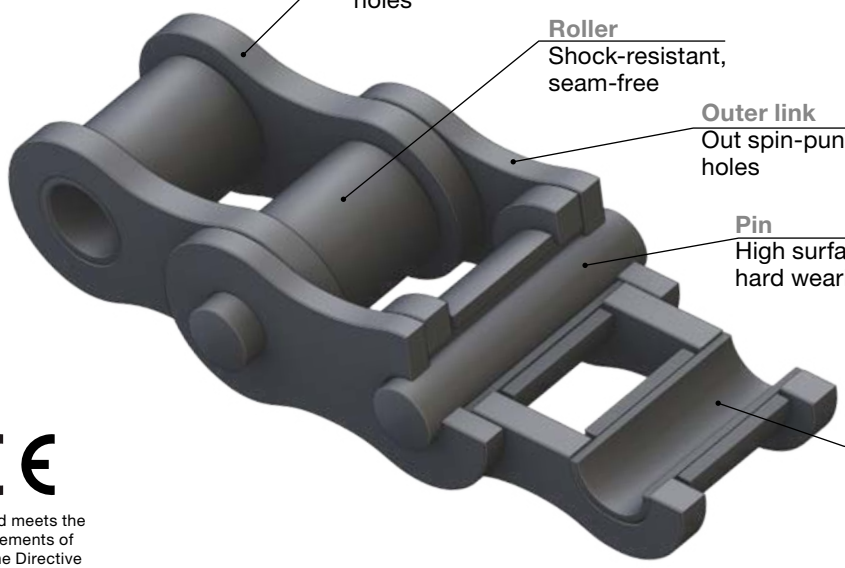


CE

Rexnord meets the requirements of Machine Directive 2006/42/EC

## APPLICATIONS

- Steelmaking industry e.g. looping towers
- Heavy mechanical engineering
- Marine diesel timing chains

## CHARACTERISTICS

- High-precision adjustability
- Special Rexnord inner link contour for outstanding fatigue resistance
- Optimum operating reliability

## ADVANTAGES

- Suitable for use where other roller chains have reached their performance limit
- Long service life
- Optimum running-in performance

## LUBRICATION

- RexPro lubrication without heavy metals for improved protection
- Operating temperature: -30° C to +130° C (can be extended from -40° C to +250° C
- Very good suface adhesion; remains drip resistant even at high temperatures
- No heavy metals, Teflon- and silicone-free

MODULE_04/GB/2014/03 // No liability accepted for misprints or errors!

# RexPro - High performance from Rexnord

### Excellent Corrosion Protection
- 8 - 10 times better than the best competitors
- More than 100 % better in the buckling test
- Highly versatile, also suitable for aggressive environments

### Improved Wear Resistance
- 8 - 12 % improvement in comparison to predecessor
- Great protection through RexPro lubrication
- Long working life
- High operating reliability

### High Fatigue Resistance
- Ball-drifted plate holes
- Shot-peened chain links, seam-free rollers
- High pre-loading

### Eco friendly
- Through RexPro lubrication
- No heavy metals; Teflon- and silicone-free
- Environmental management system conforms to DIN EN ISO 14001

# Salt spray test in accordance with DIN EN ISO 9227

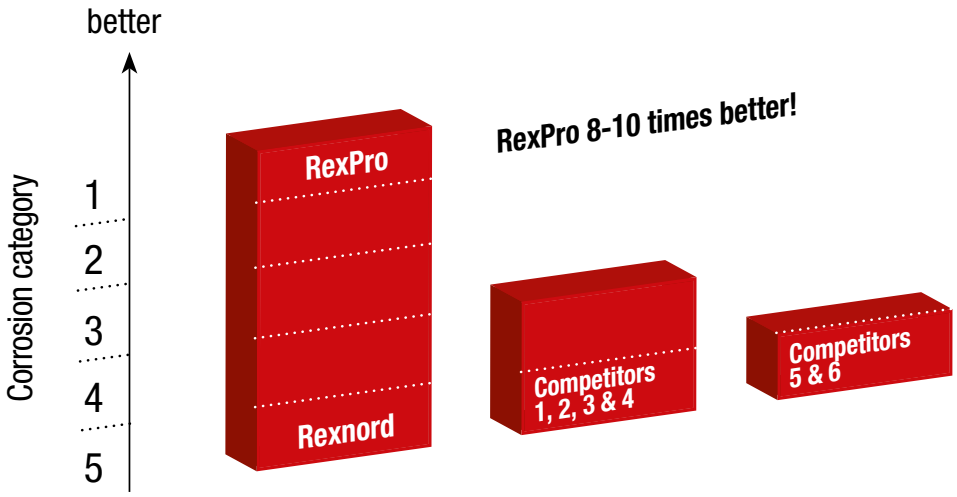

CE

Rexnord meets the requirements of Machine Directive 2006/42/EC

MODULE_04/GB/2014/03 // No liability accepted for misprints or errors!

# Marine diesel version

High Performance from Rexnord.

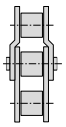

**Simplex roller chains**

CE

Rexnord meets the requirements of Machine Directive 2006/42/EC

## Excellent Corrosion Protection

- 8 - 10 times better than the best competitors
- More than 100 % better in the buckling test
- Highly versatile, also suitable for aggressive environments

## Improved Wear Resistance

- 8 - 12 % improvement in comparison to predecessor
- Great protection through RexPro lubrication
- Long working life
- High operating reliability

## High Fatigue Resistance

- Ball-drifted plate holes
- Shot-peened chain links, seam-free rollers
- High pre-loading

## Eco friendly

- Through RexPro lubrication
- No heavy metals; Teflon- and silicone-free
- Environmental management system conforms to DIN EN ISO 14001

## Simplex roller chains, DIN ISO 606 (DIN 8187) (Marine-Diesel)

| Chain No. | Pitch p | | Width beetween inner plates | Roller diameter | Pin diameter | Width over inner link | Plate depth | Transverse pitch | Pin length | Bearing area | Required minimum breaking strength DIN/ISO | Weight |
|---|---|---|---|---|---|---|---|---|---|---|---|---|
| | | | $b_1$ min | $d_1$ max | $d_2$ max | $b_2$ max | g | $a_1$ max | $a_3$ max | A | $F_U$ | q |
| | Inch | mm | mm | mm | mm | mm | mm | mm | mm | cm² | N | kg/m |
| 32 B - 1 M | 2.00 | 50.8 | 30.99 | 29.21 | 17.81 | 45.5 | 41.2 | - | 65.1 | 8.10 | 250 000 | 9.5 |
| 40 B - 1 M | 2.50 | 63.5 | 38.10 | 39.37 | 22.89 | 55.7 | 55.3 | - | 82.6 | 12.7 | 355 000 | 17.0 |
| 48 B - 1 M | 3.00 | 76.2 | 45.72 | 48.26 | 29.24 | 70.5 | 65.3 | - | 98.5 | 20.6 | 560 000 | 26.0 |
| 56 B - 1 M | 3.50 | 88.9 | 53.34 | 53.98 | 34.32 | 81.3 | 80.3 | - | 114.0 | 27.9 | 850 000 | 37.0 |
| 64 B - 1 M | 4.00 | 101.6 | 60.96 | 63.50 | 39.40 | 92.0 | 93.3 | - | 130.0 | 36.2 | 1 120 000 | 50.0 |
| 72 B - 1 M | 4.50 | 114.3 | 68.58 | 72.39 | 44.50 | 103.0 | 105.3 | - | 147.0 | 46.2 | 1 400 000 | 65.0 |

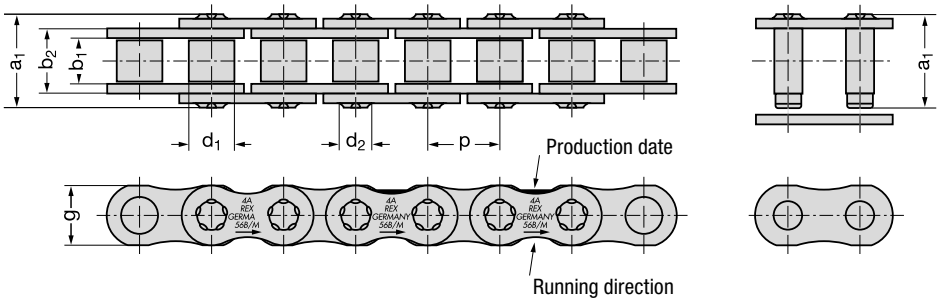


MODULE_04/GB/2014/03 // No liability accepted for misprints or errors!

# Marine diesel version

High Performance from Rexnord.

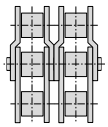

**Duplex roller chains**

## Excellent Corrosion Protection

- 8 - 10 times better than the best competitors
- More than 100 % better in the buckling test
- Highly versatile, also suitable for aggressive environments

## Improved Wear Resistance

- 8 - 12 % improvement in comparison to predecessor
- Great protection through RexPro lubrication
- Long working life
- High operating reliability

## High Fatigue Resistance

- Ball-drifted plate holes
- Shot-peened chain links, seam-free rollers
- High pre-loading

## Eco friendly

- Through RexPro lubrication
- No heavy metals; Teflon- and silicone-free
- Environmental management system conforms to DIN EN ISO 14001

CE

Rexnord meets the requirements of Machine Directive 2006/42/EC

## Duplex roller chains, DIN ISO 606 (DIN 8187) (Marine-Diesel)

| Chain No. | Pitch p | | Width beetween inner plates | Roller diameter | Pin diameter | Width over inner link | Plate depth | Transverse pitch | Pin length | Bearing area | Required minimum tensile strength DIN/ISO | Weight |
|---|---|---|---|---|---|---|---|---|---|---|---|---|
| | | | $b_1$ min | $d_1$ max | $d_2$ max | $b_2$ max | g | e | $a_1$ max | A | $F_U$ | q |
| | Inch | mm | mm | mm | mm | mm | mm | mm | mm | cm² | N | kg/m |
| 40 B - 2 M | 2.50 | 63.5 | 38.10 | 39.37 | 22.89 | 55.7 | 55.3 | 72.29 | 154.0 | 25.5 | 630 000 | 34.0 |
| 48 B - 2 M | 3.00 | 76.2 | 45.72 | 48.26 | 29.24 | 70.5 | 65.3 | 91.21 | 190.0 | 41.2 | 1 000 000 | 53.0 |
| 56 B - 2 M | 4.50 | 88.9 | 53.34 | 53.98 | 34.32 | 81.3 | 80.3 | 106.60 | 221.0 | 55.8 | 1 600 000 | 74.0 |
| 64 B - 2 M | 4.00 | 101.6 | 60.96 | 63.50 | 39.40 | 92.0 | 93.3 | 119.89 | 250.0 | 72.5 | 2 000 000 | 98.0 |
| 72 B - 2 M | 4.50 | 114.3 | 68.58 | 72.39 | 44.50 | 103.0 | 105.3 | 136.27 | 283.0 | 92.4 | 2 500 000 | 128.0 |

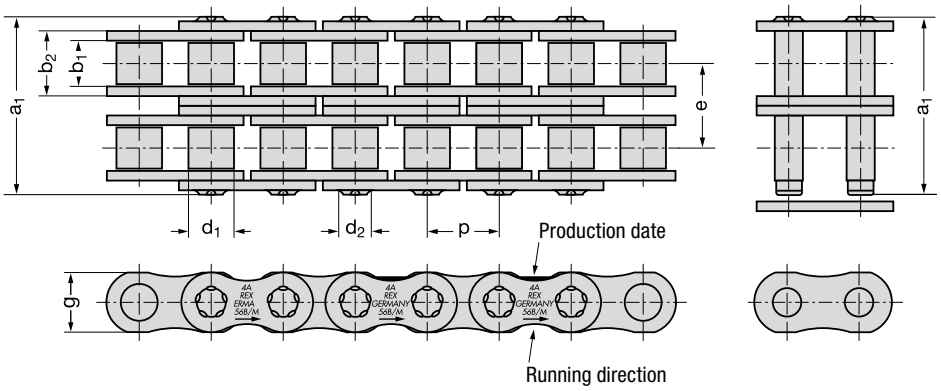


MODULE_04/GB/2014/03 // No liability accepted for misprints or errors!

REXNORD
The right chain!

# Connecting dimensions for roller chains, European and American types

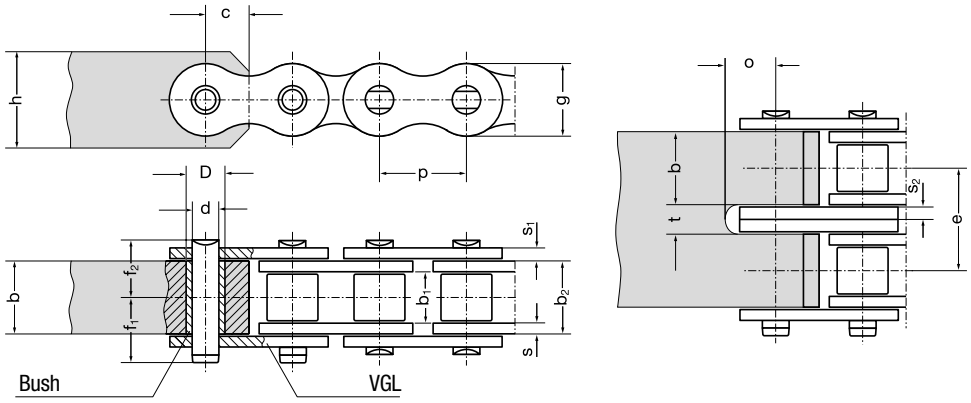


- Required material hardness of fixing elements: at least 490 N/mm²
- To increase wear resistance, fit a bush (surface hardness rating approx. 60 HRc) to the connecting element, if joint mobility is required at the connection point.
- Hardened bushes are not required in case of static loading
- Please order bushes using the corresponding bush part no.
- The bush bore diameters $d^{C10}$ result from press-fitting in bore diameter $D^{S7}$
- If no bushes are fitted, the bore $d^{C10}$ is inserted directly into the connection element

## Connecting dimensions for roller chains, European type, DIN ISO 606 (DIN 8187)

| Chain No. | Pitch p | | Width between inner plates | Width over inner link | Plate thickness | | | | | | | | | | Bore Ø | | | | Bush part no. |
|---|---|---|---|---|---|---|---|---|---|---|---|---|---|---|---|---|---|---|---|
| | | | $b_1$ min | $b_2$ max | s | $s_1$ | $s_2$ | g | e | $f_1$ | $f_2$ | h | b max | c | $d^{C10}$ | $D^{S7}$ | t | o | |
| | inch | mm | mm | mm | mm | mm | mm | mm | mm | mm | mm | mm | mm | mm | mm | mm | mm | mm | |
| 08 B | 0.50 | 12.70 | 7.75 | 11.30 | 1.70 | 1.70 | 1.25 | 11.60 | 13.92 | 10.30 | 8.40 | 11 | 11.20 | 6.0 | 4.45 | 6.27 | 2.7 | 7.5 | 001544 |
| 10 B | 0.625 | 15.875 | 9.65 | 13.28 | 1.70 | 1.50 | 1.50 | 14.60 | 16.59 | 11.30 | 9.40 | 13 | 13.20 | 7.5 | 5.08 | 7.00 | 3.2 | 8.0 | 001543 |
| 12 B | 0.75 | 19.05 | 11.68 | 15.62 | 1.80 | 1.80 | 1.80 | 15.90 | 19.46 | 13.20 | 11.10 | 16 | 15.60 | 10.0 | 5.72 | 8.40 | 3.8 | 9.5 | 001542 |
| 16 B | 1.00 | 25.40 | 17.02 | 25.40 | 3.75 | 3.05 | 3.05 | 20.50 | 31.88 | 21.60 | 17.70 | 20 | 25.40 | 14.0 | 8.28 | 11.70 | 6.4 | 13.0 | 001541 |
| 20 B | 1.25 | 31.75 | 19.56 | 29.00 | 4.50 | 4.50 | 3.50 | 25.70 | 36.45 | 24.10 | 20.20 | 26 | 29.00 | 16.5 | 10.19 | 14.00 | 7.4 | 16.5 | 001449 |
| 24 B | 1.50 | 38.10 | 25.40 | 37.90 | 5.80 | 5.00 | 5.00 | 33.00 | 48.36 | 31.60 | 26.90 | 33 | 37.90 | 19.5 | 14.63 | 18.99 | 10.6 | 20.0 | 001540 |
| 28 B | 1.75 | 44.45 | 30.99 | 46.50 | 6.50 | 5.50 | 6.00 | 37.00 | 59.56 | 36.60 | 31.60 | 36 | 46.50 | 23.0 | 15.90 | 21.64 | 12.6 | 24.0 | 001539 |
| 32 B | 2.00 | 50.80 | 30.99 | 45.50 | 6.30 | 6.30 | 6.30 | 41.20 | 58.55 | 38.40 | 32.50 | 42 | 45.50 | 27.0 | 17.81 | 23.12 | 13.2 | 27.0 | 001538 |
| 40 B | 2.50 | 63.50 | 38.10 | 55.70 | 8.50 | 8.00 | 8.00 | 51.50 | 72.29 | 47.50 | 39.40 | 52 | 55.70 | 35.0 | 22.89 | 29.18 | 16.6 | 35.0 | 017776 |
| 48 B | 3.00 | 76.20 | 45.72 | 70.50 | 12.00 | 10.00 | 10.00 | 63.50 | 91.21 | 56.00 | 49.20 | 64 | 70.50 | 40.0 | 29.24 | 37.90 | 20.6 | 40.0 | 001535 |
| 56 B | 3.50 | 88.90 | 53.34 | 81.30 | 13.60 | 12.00 | 12.00 | 77.00 | 106.60 | 64.80 | 57.80 | 77 | 81.30 | 45.0 | 34.32 | 43.50 | 25.0 | 51.0 | 001536 |

## Connecting dimensions for roller chains, American type, DIN ISO 606 (DIN 8188)

| Chain No. | Pitch p | | Width between inner plates | Width over inner link | Plate thickness | | | | | | | | | | Bore Ø | | | | Bush part no. |
|---|---|---|---|---|---|---|---|---|---|---|---|---|---|---|---|---|---|---|---|
| | | | $b_1$ min | $b_2$ max | s | $s_1$ | g | e | $f_1$ | $f_2$ | h | b max | c | $d^{C10}$ | $D^{S7}$ | t | o | |
| | inch | mm | mm | mm | mm | mm | mm | mm | mm | mm | mm | mm | mm | mm | mm | mm | mm | |
| 40 | 0.50 | 12.70 | 7.85 | 11.15 | 1.50 | 1.50 | 11.60 | 14.38 | 11.2 | 8.1 | 11 | 11.10 | 6.0 | 3.96 | 5.98 | 3.2 | 7.0 | 001544 |
| 50 | 0.625 | 15.875 | 9.40 | 13.80 | 2.00 | 2.00 | 14.60 | 18.11 | 12.0 | 10.2 | 13 | 13.80 | 7.7 | 5.08 | 7.65 | 4.2 | 9.0 | 001543 |
| 50 | 0.75 | 19.05 | 12.57 | 17.70 | 2.40 | 2.40 | 17.60 | 22.78 | 14.4 | 12.8 | 16 | 17.60 | 9.0 | 5.94 | 9.00 | 5.0 | 10.0 | 001542 |
| 80 | 1.00 | 25.40 | 18.75 | 22.50 | 3.05 | 3.05 | 23.50 | 29.29 | 20.4 | 16.5 | 22 | 22.30 | 12.0 | 7.92 | 11.67 | 6.8 | 14.0 | 001541 |
| 100 | 1.25 | 31.75 | 18.98 | 27.40 | 4.00 | 4.00 | 28.70 | 35.76 | 23.7 | 19.7 | 26 | 27.40 | 15.5 | 9.53 | 13.82 | 8.4 | 17.5 | 001449 |
| 120 | 1.50 | 38.10 | 25.22 | 35.30 | 4.70 | 4.70 | 34.40 | 45.44 | 30.0 | 24.9 | 30 | 35.20 | 18.5 | 11.10 | 16.13 | 9.8 | 20.0 | 001540 |
| 140 | 1.75 | 44.45 | 25.22 | 37.00 | 5.50 | 5.50 | 40.80 | 48.87 | 31.6 | 26.7 | 36 | 37.00 | 21.5 | 12.70 | 18.29 | 11.6 | 23.5 | 001539 |
| 160 | 2.00 | 50.80 | 31.55 | 45.00 | 6.30 | 6.30 | 47.80 | 58.55 | 36.4 | 31.8 | 42 | 44.70 | 24.0 | 14.27 | 20.70 | 13.2 | 27.5 | 001538 |
| 180 | 2.25 | 57.15 | 35.72 | 50.50 | 7.00 | 7.00 | 54.00 | 65.35 | 41.4 | 35.7 | 47 | 50.60 | 27.0 | 17.46 | 25.35 | 14.6 | 32.0 | 017776 |
| 200 | 2.50 | 63.50 | 37.85 | 54.70 | 8.00 | 8.00 | 60.00 | 71.55 | 45.0 | 39.0 | 52 | 54.60 | 30.0 | 19.84 | 28.38 | 16.6 | 34.5 | 001535 |
| 240 | 3.00 | 76.20 | 47.35 | 67.50 | 9.50 | 9.50 | 70.00 | 87.33 | 55.5 | 47.4 | 62 | 67.50 | 37.0 | 23.80 | 34.28 | 19.6 | 41.0 | 001536 |

MODULE_04/GB/2014/03 // No liability accepted for misprints or errors!

REXNORD
The right chain!

REXNORD
The right chain!

# Overview Rexnord roller chains

## Roller Chains

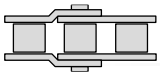

**RexPro**
RexPro lubrication
improved wear resistance
high fatigue resistance

- Outstanding protection against corrosion and wear
- Unique protection against chain joint stiffness
- Extremely eco-friendly

**RexAthletic**
good loading capacity
extended lubrication intervals

- Durable and low-maintenance
- Longer servicing intervals
- High loading capacity

**RexCarbon**
no lubrication
low noise

- Maintenance-free
- Low noise
- Eco-friendly

**RexPlus**
excellent corrosion resistance
high reliability

- Excellent resistance to rust and acids
- Highly reliable
- Fulfils hygiene requirements
- NSF H1 certification

**RexPlusCarbon**
no lubrication
excellent corrosion resistance

- Combination of RexPlus and RexCarbon
- Excellent resistance to rust and acids
- Maintenance-free
- NSF H1 certification

**RexHiPro**
good corrosion resistance
excellent loading capacity

- Outstanding corrosion resistance
- Long service life
- High loading capacity

**Link-Belt®**
a brand of REXNORD

- The optimum choice for light and medium duty
- Good cost-benefit ratio
- High availability

**RexProX**
RexPro lubrication
improved wear resistance
high fatigue resistance

- Extremely high loading capacity
- Long service life
- Outstanding protection against corrosion and wear

## Leaf Chains

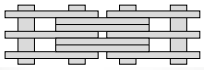

**RexPro**
RexPro lubrication
improved wear resistance
high fatigue resistance

- Outstanding protection against corrosion and wear
- Unique protection against chain joint stiffness
- Extremely eco-friendly

**RexHiPro**
good corrosion resistance
excellent loading capacity

- Outstanding corrosion resistance
- Long service life
- High loading capacity

**RexAthletic**
good loading capacity
extended lubrication intervals

- Durable and low-maintenance
- Longer servicing intervals
- High loading capacity
- Extreme wear resistance for double-length service life

**REXDL®**
a brand of REXNORD

- The optimum choice for light and medium duty
- Good cost-benefit ratio
- Good availability

Rexnord Kette GmbH · Industriestr. 1 · 57518 Betzdorf · Tel (49) 2741 284 0 · rexinfo@rexnord.com · www.rexnord-kette.de
Rexnord Corporate Headquarters · 4701 W. Greenfield Avenue · Milwaukee, WI 53214-5310 · Phone: (414) 643 3000

MODULE_04/GB/2014/03 // No liability accepted for misprints or errors!